Report on the Partial Grid Disturbances in the Northern Regional Electricity Grid on 02nd January 2010

Submitted to the Honourable
Central Electricity Regulatory Commission

January 2010

The Report is in compliance to the CERC's order dated 14th January 2010 in Petition number 2/2010 in the matter of grid disturbances in the Northern Region on 02nd January 2010

INDEX

	PARTICULARS	PAGE
	Overview	8
SECTION 1	Brief introduction of the disturbances on 2nd Jan 2010	10
1.1	Background	10
1.2	Antecedent Condition	10
1.3	Power Supply Position in all constituent States	11
1.4	Frequency Profile	11
1.5	Brief details of the disturbance	12
1.6	Main causes of the disturbance	13
SECTION 2	Operational Planning in respect of ensuring transmission system reliability during the winter months.	14
2.1	Problem experienced in the transmission system during winter	14
2.2	Efforts to ensure reliability of the transmission	15
2.3	Actions taken before onset of winter during 2009-10	15
2.4	Other measures for enhancing the reliability of the grid	17
SECTION 3	Analysis of Grid Disturbance at 03:01 hrs. of 2nd Jan 2010.	19
3.1	Tripping of EHV transmission system before the grid disturbance at 0301 hrs of Jan-2010	19
3.2	Tripping Events in the system prior to system disturbance at 0301 hrs	20
3.3	Sequence of Events leading to a split in the system at 0301 hrs	25
SECTION 4	Analysis of Grid Disturbance at 21:54 hrs. of 2nd Jan 2010	33
4.1	Antecedent conditions	33
4.2	Events starting from 2144 hrs leading to disturbance at 2154 hrs	34
4.3	Sustained fault in system being fed from 400/220 kV Bamnauli substation	40
4.4	Sequence of Events after clearance of fault on 400 kV Bamnauli-Ballabgarh-II	46
SECTION 5	Failure of defense mechanisms in the grid.	49
5.1	Defense mechanism available in Northern Regional Grid	49
5.2	Performance of defense mechanism in the disturbance	50
5.3	Performance of UVLS	53

SECTION 6		Restoration of the system following the two disturbances.	55
	6.1	Restoration after the event at 0301 hrs	55
	6.2	Restoration sequence of the incident at 0301 hrs	56
	6.3	Restoration after the event at 2154 hrs	59
	6.4	Restoration sequence after the event at 2154 hrs	60
	6.5	Supply interruption to Railways and its restoration	62
SECTION 7		Issues of importance and suggested remedial measures.	64
	7.1	Replacement and cleaning of insulators	64
	7.2	Protection coordination settings	65
	7.3	Requirement to change CT ratio to higher range	66
	7.4	Commissioning of RTUs and telemeterd data from new grid substations	66
	7.5	Adequate back up power supply at wideband communication nodes/ repeater stations	66
	7.6	According higher priority to safety net	67
	7.7	Requirement to deploy trained manpower at control centres / substations	67
	7.8	Strengthening of control centres/substations during contingent situations	68
	7.9	Non-availability of reports / data from constituents	68
	7.10	Analysis of grid disturbance / incidents in their systems by individual utilities	69
	7.11	Provision of time synchronization through GPS in all the generating stations / sub-stations of regional importance	70
	7.12	Provision of Auto-Reclosure feature on the transmission lines	70
	7.13	Sustained high voltages during network build-up	70
	7.14	Maintaining a state of high alertness by all control centres during a crisis	70
	7.15	Availability of primary response from generating units	71
	7.16	Expediting the commissioning of additional links in the corridor	71
	7.17	Need for more dynamic reactive power reserves	71

List of Tables and Figures

		PAGE
Table-1	Regional Summary	10
Table-2	Power Supply Position in all constituents state	11
Table-3	Disturbance Summary	12
Table-4	Energy not Served	12
Table-5	Mock Black start exercise dates	16
Table-6	Lines that were already out in the axis of separation	26
Table-7	State wise planned Load relief from UFR relays in NR	49
Table-8	Recommended df/dt relays setting in NEW grid	50
Table-9	State wise planned Load Relief from df/dt relays in NR	50
Table-10	Performance of UFR and df/dt load shedding scheme at 0301	51
Table-11	Performance of UFR and df/dt based load shedding scheme at 1945 hrs	52
Table-12	Interruption in Traction supply as given by NR railways	62
Figure -1	Frequency profile	11
Figure -2	Cumulative outage in 400 kV transmission system on 2nd Jan 2010	19
Figure -3	Cumulative outage of 220 kV transmission system on 2nd Jan 2010	20
Figure -4	Single Line Diagram of 400 kV Ballabgarh substation	24
Figure -5	MW and MVAR flow on 400kV Dadri Malerkotla	29
Figure -6	MVAR losses on 400 kV Dadri- Malerkotla vis-a-vis line loading	30
Figure -7	400 kV Delhi ring main system	34
Figure -8	Single Line Diagram of 400 kV Ballabgarh substation	35
Figure -9	Snapshot at 2145 hrs taken from Historical Data Reconstruction facility at NRLDC	41
Figure -10	Single Line Diagram of 400 kV Bamnauli substation	44
Figure -11	Angular Separation between North and West bus at Vindhyachal HVDC Back-to-back	48
Figure -12	Plot of grid frequency and rate of change of grid frequency	52
Figure -13	Voltage profile of 400 kV Dadri NTPC and 400 kV Malerkotla in the morning of 02nd Jan 2010	53
Figure -14	Voltage profile at 400 kV Kishenpur and Srinagar in the morning of 2nd Jan 2010	54

LIST OF ANNEXURE AND EXHIBITS

	OVERVIEW	No of Pages
ANNEXE-I	Flash Report dated 2nd Jan 2010 issued by NRLDC for Grid Disturbance at 03:01 Hrs. of 02/01/2010	1
ANNEXE-II	Flash Report dated 3rd Jan 2010 issued by NRLDC for Grid Disturbance at 21:54 Hrs. of 02/01/2010	2
ANNEXE-III	Preliminary Report dated 5th Jan 2010 issued by NRLDC for the above two Grid Disturbances	19
ANNEXE-IV	Office Order dated 8th January 2010 by Central Electricity Authority (CEA) constituting a Committee under the Chairmanship of Member (GO&D), CEA to enquire into the above disturbances	3
ANNEXE-V	Minutes of the meeting taken by Joint Secretary (Trans.), Ministry of Power, held on 18/01/2010 at Shram Shakti Bhawan, in connection with the above disturbances issued on 22nd Jan 2010	7
	SECTION 1	
ANNEXE-1/I	Graphical plots of ambient temperature and relative humidity for the period 27th December 2009 to 7th January 2010	1
ANNEXE-1/II	Plot of load profile of Northern Region on 1st , 2nd and 3rd Jan 2010 in comparison to 31st Dec 2009	1
ANNEXE-1/III	Loss of generation in NR during disturbances on 2nd Jan 2010	1
EXHIBIT-1/I	400 kV diagram of Northern Region	1
EXHIBIT-1/II	400 kV and 220 kV diagram of Delhi ring main system	1
	SECTION 2	
ANNEXE-2/I	Status of replacement of porcelain insulators with Polymer/Anti fog insulators in Northern Region as brought out in the special meeting at NRPC on 16th Dec 2009	18
ANNEXE-2/II	Details of locations in Kanpur/Mainpuri area where insulators were planned to be cleaned using hotline washing through helicopters during 2009-10 winter	1
ANNEXE-2/III	List of line shutdowns availed from 1st Sep 2009 to 31st Dec 2009 for ensuring the reliability of transmission system during winter period	4
ANNEXE-2/IV	Extracts of the minutes of 14th Technical Co-ordination sub-Committee (TCC)/15th meetings of Northern Regional Power Committee (NRPC) held on 23rd and 24th Dec-09 on the subject of under-frequency and df/dt relays	1
ANNEXE-2/V	Extracts of the minutes of 14th TCC/15th Board meetings of NRPC held on 23rd and 24th Dec-09 on the subject of Protection system audit in Northern Grid	1

ANNEXE-2/VI	Extracts of the minutes of 24th USMG meeting held on 24th Aug- 09 on the subject of non-availability of real time data	3
	SECTION 3	No. of Pages
ANNEXE-3/I	List of lines which tripped right from the night hours of 1st January 2010	8
ANNEXE-3/II	Sequence of Events (SoE) recorded at NRLDC SCADA system	18
EXHIBIT-3/I	Power Map of Haryana	1
EXHIBIT-3/II	Numerical relay ane Event Logger output at Ballabgarh end for tripping of 400 kV Bamnauli-2 line at 0255 hours.	4
EXHIBIT-3/III	Numerical Relay output of 400 kV Bawana-2 line tripping at 0254 hours from Abdullapur (PG) substation	2
EXHIBIT-3/IV	Power Map of Punjab	1
EXHIBIT-3/V	Historical Tabular Trend for units 3,4,5 and 6 at Ropar TPS for the tripping at 0256 hours.	4
EXHIBIT-3/VI	Data Acquisition System (DAS) output of units 1,2 at Ropar TPS for the tripping at 0256 hours	2
EXHIBIT-3/VII	Numerical Relay output of 400 kV Khedar-Moga tripping at Khedar end at 0256 hours	11
EXHIBIT-3/VIII	Numerical relay output of 400 kV Jhakri-Nalagarh-2 at Jhakri end for tripping at 0301 hours	1
EXHIBIT-3/IX	Numerical Relay and EL output of 400 kV Dadri-Malerkotla line tripping at 0301 hours from Malerkotla end.	6
EXHIBIT-3/X	400 kV diagram showing axis of separation at 03:01:43 hrs. of 2nd January 2010	1
	SECTION 4	
ANNEXE-4/I	Sequence of Events recorded at NRLDC SCADA system	8
EXHIBIT-4/I	Numerical relay and Event Logger (EL) output at Ballabhgarh for 400 kV Bamnauli-II line tripping at 21:44 hrs	6
EXHIBIT-4/II	Numerical relayand Event Logger (EL) output at Ballabhgarh for 400 kV Bamnauli-I tripping at 21:44 hrs	4
EXHIBIT-4/III	Numerical relay and Event Logger (EL) output at Bahadurgarh for Bawana line tripping at 21:44 hrs	7
EXHIBIT-4/IV	Numerical relay and Event Logger (EL) output at Hissar for Bawana line tripping at 21:44 hrs	3
EXHIBIT-4/V	Numerical relay and Event Logger (EL) output at Abdullapur for Bawana-2 line tripping at 21:44 hrs	4
EXHIBIT-4/VI	Numerical relay and Event Logger (EL) output at Abdullapur for Bawana-1 line tripping at 21:44 hrs	4

EXHIBIT-4/VII	Numerical relay output at Dadri NTPC for Panipat-2 line tripping at 21:44 hrs	6
EXHIBIT-4/VIII	Disturbance Recorder (DR) output at Bamnauli for Ballabhgarh-2 line during triggering for sustained fault for two minutes	4
EXHIBIT-4/IX	Numerical relay & EL output at 400kV Hissar for 400 kV Bawana line tripping at 21:49 hrs	4
EXHIBIT-4/X	Numerical relay output at 400 kV Dadri NTPC for Panipat-I line tripping at 21:54hrs	1
EXHIBIT-4/XI	Numerical Relay and Event Logger (EL) output at Abdullapur for Bawana-1 Line tripping at 21:54 hrs	5
EXHIBIT-4/XII	Numerical relay and Event Logger output at Malerkotla for Dadri line tripping at 21:54 hrs	6
EXHIBIT-4/XIII	400 kV diagram showing axis of separation at 2154 hours.	1
	SECTION 5	No. of Pages
ANNEXE -5/I	Breakup of load relief obtained through UFR and df/dt relays during the grid disturbance at 03:01 hrs. of 2nd January 2010	2
ANNEXE-5/II	Historical Tabular Trend for units 3,4 and 5 at Ropar TPS during the grid disturbance at 21:54 hrs. of 2nd January 2010	3
ANNEXE-5/III	Breakup of load relief obtained through UFR and df/dt relays during the grid disturbance at 21:54 hrs. of 2nd January 2010	2
	SECTION 6	
EXHIBIT-6/I	Power Supply to Railway Traction	1
	SECTION 7	
ANNEXE-7/I	Details of insulators replaced by POWERGRID in NR-I & NR-II regions vis-à-vis locations of faults during the above disturbances	4
ANNEXE-7/II	Communication from NRLDC to different constituents regarding change in Current Transformer (CT) ratio	7
ANNEXE-7/III	The details of generating stations/grid substations which are operating without RTUs/data telemetery facility	13
ANNEXE-7/IV	Details of Wideband communication nodes in NR where back up power supply is of importance	4
EXHIBIT-7/I	Wideband communication network in Northern Region	1

OVERVIEW

The Northern regional electricity grid experienced two partial grid disturbances on the 2nd January 2010 affecting power supply to consumers in the North West part of the Northern grid. These disturbances occurred at 0301 hours and 2154 hours of 2nd January, 2010.

The system restoration was taken up immediately by the Northern Regional Load Despatch Centre (NRLDC) in co-ordination with the State Load Despatch Centres (SLDCs) and Generating Companies. Simultaneously NRLDC also issued a flash report at 0500 hours of 2nd January 2010 after the first grid disturbance. This report was also uploaded on NRLDC's website www.nrldc.in . The second report was also issued at 0600 hours of 3rd January 2010 and uploaded on the website. Copies of these flash reports are enclosed at Annexe-I and Annexe-II respectively. The Crisis Management Group for Northern Region constituted in March 2008, headed by Member (Grid Operation & Distribution), CEA met immediately at NRLDC on 02nd January 2010 and on 04th January 2010 at NRPC to take stock of the situation and monitor actions to minimize further tripping.

After these events, all constituents of the Northern Region were requested to forward details of these incidents to NRLDC in line with section 5.9.4(b) and 5.9.6 (c) of the Indian Electricity Grid Code (IEGC). In the 2nd meeting of the Crisis Management Group for Northern Region held on 04th Jan-2010 this requirement was further reiterated. Simultaneously, the data available at NRLDC through the Supervisory Control and Data Acquisition System (SCADA) was also studied. Data from the different constituents are still being received. However, considering the severity of the incident, NRLDC issued a preliminary report dated 5th January 2010 based on a study of the data available till that point of time. This report was also uploaded on NRLDC's website. A copy of the preliminary report issued by NRLDC is enclosed at Annexe-III.

Meanwhile, the Central Electricity Authority (CEA) through its Office Order F.No.CEA/5-41(07)/Secy-2009/ dated 8th January 2010 constituted a Committee under the Chairmanship of Member (Grid Operation and Distribution), CEA to enquire into the above grid disturbances and submit a report within two months. A copy of the Office Order by CEA is attached at Annexe-IV.

On this issue, a meeting was also convened by Joint Secretary (Trans), MOP, Govt. of India on 18th January, 2010 at Shram Shakti Bhawan, New Delhi and the subject matter along with the remedial measures were discussed. A copy of the minutes of this meeting is enclosed at Annexe-V.

The Honourable Central Electricity Regulatory Commission (CERC) vide its order dated 14th January 2010 has directed the CTU and NRLDC ***'to carry out a detailed study of the grid disturbance which occurred on 2.1.2010 and submit a report containing the reasons for grid disturbance, preventive steps taken so far and the suggested remedial measures by 30.1.2010.'***

This report is in compliance of the above order of the Honourable Commission and is based on further inputs available to NRLDC. This report is without prejudice to any other findings of the above Committee constituted by CEA. This report is structured as under:

SECTION-1	Brief introduction of the disturbances on 2nd Jan 2010
SECTION-2	Operational Planning in respect of ensuring transmission system reliability during the winter months
SECTION-3	Analysis of Grid Disturbance at 03:01 hrs. of 2nd Jan 2010
SECTION-4	Analysis of Grid Disturbance at 21:54 hrs. of 2nd Jan 2010
SECTION-5	Failure of defense mechanisms in the grid
SECTION-6	Restoration of the system following the two disturbances
SECTION-7	Issues of importance and suggested remedial measures
	Annexure
	Exhibits

SECTION 1

Brief Introduction of the Grid Disturbances in Northern Region on 2nd Jan-10

1.1. Background

Northern Region experienced a partial grid disturbance on the night of 1st – 2nd January, 2010 at 03:01 hrs. in which power supply in Punjab, North Haryana, HP, J & K and UT Chandigarh sub-system was affected. This was followed by another partial disturbance almost on the similar pattern, during the late evening hours on the same day i.e. 2nd January, 2010 at 21:54 hrs. For ease of understanding of the report, please refer to Exhibit-1/I showing the 400 kV diagram of the Northern region and Exhibit-1/II indicating the 400 kV and 220 kV Delhi ring main system.

1.2. Antecedent Condition

Power system network conditions during the evening peak hours of 1st Jan 2010 were normal. Low ambient temperature (below 10^0 C) and high relative humidity (above 90 %) were observed throughout the region. Plot of temperature and humidity for 27th Dec 2009 to 7th Jan 2010 is attached at Annexe-1/I. Situation was under alert condition as it has been experienced that such atmospheric conditions are favorable for fog /smog formation and tripping of transmission lines may occur due to flashover. Regional summary and other details during evening peak hours of 1st & 2nd Jan 2010 are tabulated below.

Table 1: Regional Summary

Sl No.	Description		Units	1900 hrs 1st Jan-10	0300 hrs 2nd Jan- 10	1900 hrs 2nd Jan- 10	0300 hrs 3rd Jan- 10
1	System Frequency		Hz	49.87	50.64	49.82	50.13
2	Regional Load		MW	27560	11736	26268	18356
3	Net Inter Regional Import		MW	2245	672	2238	954
4	Flow on HVDC Rihand-Dadri Bipole		MW	1100	800	1100	800
5	NR export on HVDC Back to back at Vindhyachal		MW	-200	-200	-450	-300
6	Ambient temperature at	Kanpur	0 Celsius	17.1	15.1	16.0	14.8
7		Minto Road		17.1	9.1	11.3	9.9
8		Hisar		13.4	8.0	10.6	10.1
9		Patiala		11.8	11.1	11.3	12.9
10	Relative Humidity	Kanpur	%	~100	~100	95	97
11		Minto Road		64	~100	~100	~100
12		Hisar		85	~100	~100	~100
13		Patiala		99	99	90	98

1.3. Power supply positions in all constituent states of Northern Region

Table 2: Power Supply Position in all constituent States

SL No.	States	Own Generation	Import from Grid	Demand Met	Over Drawl	Own Generation	Import from Grid	Demand Met	Over Drawl
		1900 Hrs of 1st Jan 2010				1900 Hrs of 2nd Jan 2010			
1	Punjab	2525	1822	4347	111	2105	2293	4398	705
2	Haryana	2158	2423	4581	1109	1292	2231	3523	1027
3	Rajasthan	3258	2351	5609	279	3187	2463	5650	578
4	Delhi	1009	1802	2811	-378	989	1918	2907	-336
5	Uttar Pradesh	3703	2803	6506	-665	3407	2819	6228	-623
6	Uttara-khand	434	601	1035	-11	456	646	1102	28
7	Himachal Pradesh	145	827	972	-241	187	746	933	-252
8	Jammu & Kashmir	372	1137	1509	-173	566	760	1326	-476
9	Chandigarh	0	190	190	-5	0	203	203	19

1.4. Frequency Profile

It would be seen from the frequency profile below that the frequency remained above 50.5 Hz between 0200-0300 hours. This was primarily on account of the disruption in load fed from several 220 kV substations on account of tripping of 220 kV lines. Even then the generating stations in the entire NEW grid could have back down generation in a pro-active manner (barring the generators in the North West part) as per the frequency linked dispatch guidelines and ensure that the frequency does not go much beyond 50 Hz. This action was obviously inadequate.

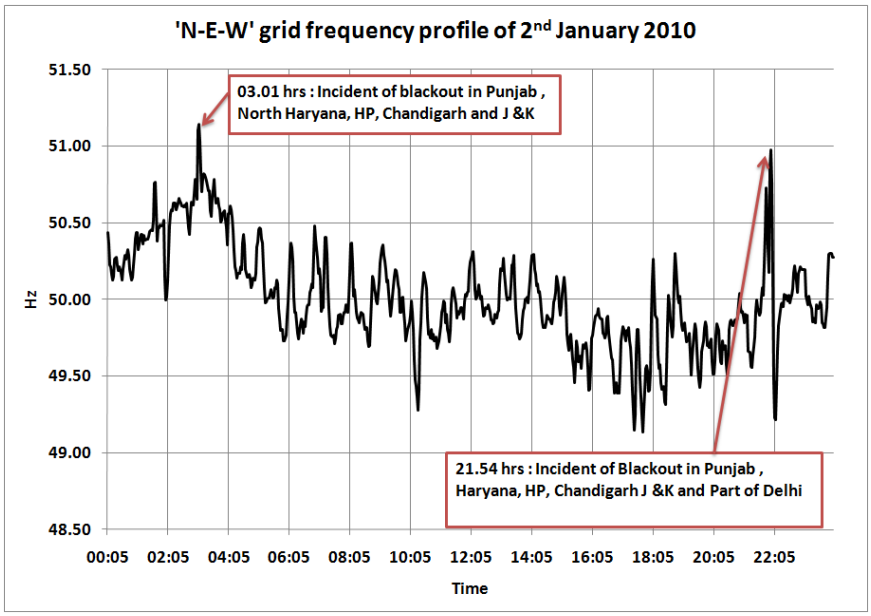

Figure 1: Frequency Profile of 02nd Jan-10

1.5. Brief details of the disturbance

Based on the initial information as obtained from SCADA system at NRLDC and the information received from the constituents, the brief details of these incidents are as follows:

Table 3: Disturbance Summary

S. No.	Date and time of disturbance	Antecedent system size (NR) (MW)	Generation loss * MW	Load affected (MW)	Areas affected
1.	02.01.2010 at 03:01 hrs.	20000	4046	7500	Punjab, North Haryana, HP, J & K and UT Chandigarh
2.	02.01.2010 at 21:54 hrs.	25000	5159	9000	Punjab, Haryana, HP, J & K ,UT Chandigarh and North/West Delhi

*- The generation loss does not include the loss of generation due to backing down.

The above figures have been worked out considering 31st Dec 2009 as a normal day. The drop in demand met on account of the disturbed conditions has been worked out based on the load curves pattern of a normal day i.e. 31st Dec 2009. Plot of load profile of 1st, 2nd & 3rd Jan 2010 with respect to 31st Dec 2009 is attached at Annexe-1/II. On account of disturbance in the grid the estimated quantum of energy not served from 1st to 3rd Jan 2010 is as summarized below.

Table 4: Energy Not Served

Sl. No	Date	Estimated quantum of energy not served (in MWh)
1	1st Jan 2010	3600
2	2nd Jan 2010	112000
3	3rd Jan 2010	43000*

For Sundays, it has been observed from past data for Northern Region that the energy consumption is 12 MU lower than on working days and this factor has been used while working out the energy not served on 3rd Jan 2010 on account of the disturbances on 2nd Jan 2010.The breakup of loss of generation during the two incidents of grid disturbance on 2nd Jan 2010 is attached at Annexe-1/III.

1.6. Main causes of the disturbance

It has been observed that the disturbances were initiated during the foggy weather conditions when a number of transmission elements in the Northern Regional grid, more particularly in the North West part of the region had gone under outage. Prima facie, the main attributor for the disturbances can be identified as :

- Depletion of transmission network due to heavy fog / smog conditions;
- Unintended and unexpected operation of protective system/switchgear of some of the critical transmission elements in already depleted network;
- Operator's inability to adequately comprehend the situation in certain cases as a result of which the system conditions were aggravated;
- Inadequate safety net in the form of automatic load shedding through under frequency relays, df/dt relays and under voltage relays.

x----x----x

SECTION 2

Operational Planning in respect of ensuring transmission system reliability during the winter months

2.1 Problems experienced in the transmission system during winter

High density fog during winters in the Northern Region is known to play havoc as far as rail, road or air traffic is concerned. There is a great deal of adverse publicity on this count, as the public at large undergo tremendous discomfort on account of travel schedules going haywire. While technology helps in overcoming these challenges partly, other constraints also come to the fore during such crisis.

Power sector is also impacted to a great extent on account of the dense fog experienced during winter. While fog per se is not a problem, the high level of Suspended Particulate Matter (SPM) in the atmosphere particularly in and around the National capital Region (NCR) leads to these pollutants getting deposited on the Extra High Voltage (EHV) transmission line insulators. Under dense fog conditions, a conducting layer gets formed on these polluted insulators leading to flashovers from the transmission line to the tower (through the conducting path formed over the insulator surfaces). These faults lead to outage of the transmission system. The phenomenon typically occurs from say 2200 hours to 0800 hours when the temperature falls below 15 degree centigrade and the Relative Humidity (RH) increases beyond the 85-90% range.

Even if the transmission lines which trip are restored, they either trip later or autoreclose several times during the night. While the fault currents are not very large during most of these faults, repeated circuit breaker operations leads to stress on the equipments. In case of the Rihand Dadri HVDC bipole, there is a facility of operating at reduced voltages, say +/- 400 kV instead of +/- 500 kV whenever such auto restarts are frequent. This helps in keeping the transmission system up, albeit at reduced power transfer capacity.

In case of 220 kV and 400 kV AC system, at times there are requests from the substation operating personnel to keep the single pole auto-reclosure facility out of service when such flashovers are frequent. This becomes a difficult proposition when the network itself gets depleted and it is this auto-reclosure facility which helps in averting a separation and possible collapse of systems.

Fault on the electrical network leads to system instability and high speed protective systems installed on the transmission network ensure that faults are cleared in much less than 100 milliseconds. However, during such large scale cross country faults

occurring in the transmission system, there are chances that the primary protection mis-operates leading to the back-up protective systems coming into play. Obviously the back up protective systems take a longer time to clear the fault, typically beyond 250 milliseconds and lead to more than the single faulted element going out. This leads to the power system going quickly from a normal state to a state of emergency and immediate efforts are necessary to bring back the system to normalcy.

2.2 Efforts to ensure reliability of the transmission system

As mentioned above, line tripping during dense winter fog conditions was hitherto a common feature in Northern region. The winter of 2002-03, 2005-06, 2006-07, 2007-08 had witnessed several tripping on the EHV transmission system in Northern Region. Historically, these trippings occurred mainly between mid-December to mid-February every year. However, during the winter of 2007-08, the Northern Region witnessed tripping on the EHV transmission system on three consecutive days viz. 7th, 8th and 9th March 2008 which led to a large section of consumers getting affected.

A Crisis Management Group (CMG) was constituted at the level of Member (Grid Operation and Distribution), CEA to monitor the long-term measures required to minimize such large scale trippings of the EHV transmission system. The following measures were decided:

- Replacing the porcelain insulators in heavily polluted or vulnerable areas with polymer insulators.
- Hotline washing of insulators either through helicopters or otherwise.
- Intensive manual cleaning of insulators prior to the onset of winter.

2.3 Actions taken before the onset of winter during 2009-10:

Since the winter period happens to be a critical time for the NR Grid, particularly in view of the tripping of the lines due to flashover / failure of insulators under foggy weather conditions, a number of actions were taken before the onset of winter of 2009-10, with specific details as follows:

2.3.1 Replacement of Insulators

Under the long term measure in order to avert the large scale trippings of the EHV lines during winter period, it was decided to replace the porcelain insulators in case of a number of lines by polymer insulators. This progress is continuously being monitored by RPC forum in different meetings and Crisis Management Group constituted under the Chairmanship of Member (GO&D), CEA is continuously being apprised of the progress in the matter. The latest details as appearing in the minutes of the special meeting held on 16.12.2009 at NRPC to review the progress of

replacement of the porcelain insulators by polymer insulators are given at Annexe-2/I.

2.3.2 Cleaning of Insulators

Since replacement of all the requisite porcelain insulators on the identified lines in heavily polluted stretches by polymer insulators is a long drawn process, it was decided that as intermediate measures in respect of some of the sections, cleaning of insulators shall also be undertaken. While envisaging the cleaning of insulators, during the last winter some of the critical sections of the important lines owned by POWERGRID were cleaned using hotline washing through helicopter. This year also certain sections under Kanpur and Mainpuri jurisdiction were identified for cleaning using the helicopter and the details are given at Annexe-2/II.

2.3.3 Shutdown of lines permitted by NRLDC in order to facilitate insulators replacement / cleaning

NRLDC co-ordinated a number of line outages between June to mid-December 2009 for the above activities in connection with ensuring reliability of the transmission system during winters. The list of line shutdowns approved by NRLDC and availed by the constituents from 1st September 2009 to 31st December 2009 is enclosed at Annexe-2/III.

2.3.4 Mock Black Start Trial

The mock black start exercise was also conducted as per the following schedule to ensure preparedness of all agencies in case of an emergency or partial blackout in any part of the grid.

Table 5: Mock Blackstart exercise dates

400 kV AC bypass at Vindhyachal HVDC Back to Back station	15th October, 2009
Nathpa Jhakri HEP	21st October, 2009
Dadri GPS	24th October, 2009
Salal HEP	29th October, 2009
Tehri HEP	9th November, 2009
Bhakra HEP	1st December, 2009

The above exercise was proved to be of extreme importance during system restoration in respect of both the above incidences.

2.3.5 Real time Monitoring of Humidity and Temperature of different locations and the weather forecast from different agencies:

After the trippings experienced in the winter of Dec 2007, it was observed that there was a strong co-relation between fog related trippings and the ambient temperature/Relative Humidity. A large number of weather transducers were installed by POWERGRID at a number of sub-stations in the region so that real time monitoring of the weather parameters could be possible.

Further, in order to anticipate the intensity of fog and weather conditions, NRLDC had also arranged to get hourly weather forecast data (updated thrice a day) from M/s SKYMET for different locations viz. Delhi, Panki and Hisar. The agency has also been providing the weather data for the current day as well as for the next day at 15 minutes interval and the same is being used extensively in planning the grid operational measures.

The six hourly fog forecast report issued by the Indian Meteorological Department (IMD) at 0530, 1130, 1730 and 2330 hours every day for the Indira Gandhi International Airport (IGIA), New Delhi is also being closely monitored daily. A link to this forecast is also provided on NRLDC's website. A high alert is sounded on days when the visibility is expected to go below 50 metres.

2.3.6 Deployment of additional manpower during the night shifts

In order to tackle the contingency situation additional manpower is being deployed in the NRLDC Control Room. This deployment is from the officers working in different departments of NLDC/ NRLDC. The prime objective is to ensure that the communication facilities, real time data servers, off-line computer systems are available round the clock and in case of any multiple contingency in the grid, the monitoring and follow-up with different agencies does not suffer adversely.

2.4 Other measures for enhancing the reliability of the grid

In order to enhance the reliability of the grid the following measures are also being taken up consistently in the different fora of NRPC.

2.4.1 Monitoring of Under Frequency Relay Load Shedding (UFRLS), Under Voltage Load Shedding (UVLS)

Provision of under frequency and under voltage load shedding is a part of defense mechanism. Continuous emphasis is being laid by NRLDC in the RPC forum for ensuring that defense mechanism in the form of Under Frequency Relay Load Shedding (UFRLS), Under Voltage Load Shedding (UVLS) and System Protection Schemes (SPS) and their smooth functioning. The issue of providing of requisite

relief during emergency by way of operation of under frequency and df/dt relays was emphasized in the last Technical Co-ordination sub-Committee (TCC)/ Northern Regional Power Committee (NRPC) meeting held on 23rd and 24th December, 2009 and the extracts of minutes are enclosed at Annexe-2/IV.

2.4.2 Protection Audit for upgradation of Protection System in Northern Grid.

The issues in regard to deficiencies in the Protection System are regularly being flagged in the Protection sub-Committee Meeting of NRPC and in order to upgrade protection in Northern Grid the subject of Protection Audit in whole of the region was also deliberated. Extracts from the minutes of the last TCC / NRPC meetings in this regard are enclosed at Annexe-2/V.

2.4.3 Availability of real time data from different generating stations and sub stations

The issue in regard to non-availability of real time data from some of the Generating stations and grid sub-stations is also being highlighted at different fora. The extracts in this regard from the minutes of 24th Unified Scheme Monitoring Group (USMG) meeting of NRPC held on 24th August 2009 are enclosed at Annexe-2/VI.

x---x---x

SECTION 3

Analysis of the grid disturbance at 03:01 hrs. of 2nd January, 2010

3.1 Tripping of the EHV transmission system before the grid disturbance at 0301 hours of 2nd January 2010:

The list of lines which tripped right from the night hours of 1st January 2010 is enclosed at Annexe-3/I. The Sequence of Events (SoE) recorded at NRLDC SCADA System is enclosed at Annexe-3/II. It would be seen from the list that by 0230 hours of 2nd January 2010, the transmission network was depleted to a great extent. (13 x 400 kV lines and 62 x 220 kV lines out). This situation worsened by 0255 hours of 2nd January 2010 with 14 x 400 kV lines and 79 x 220 kV lines out. The same is illustrated graphically in **Figure 2** and **Figure 3** below. This list does not include the 400 kV lines which were kept off to control high voltages in certain pockets within the region.

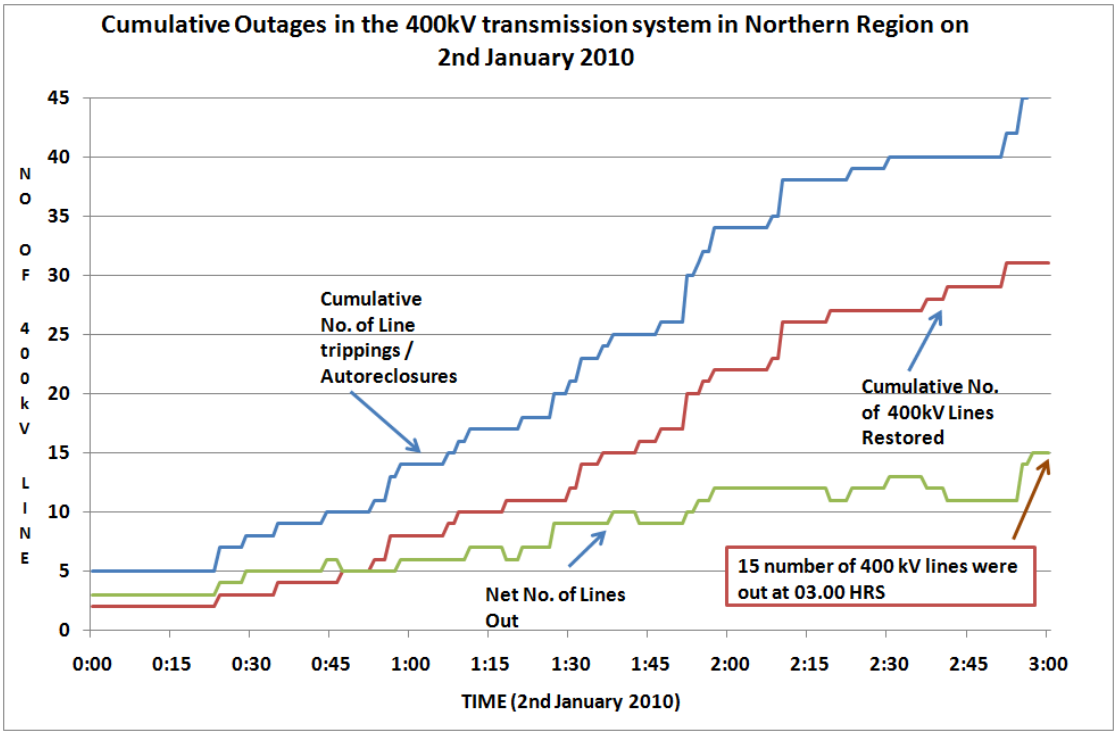

Figure 2: Cumulative outage in the 400 kV transmission system

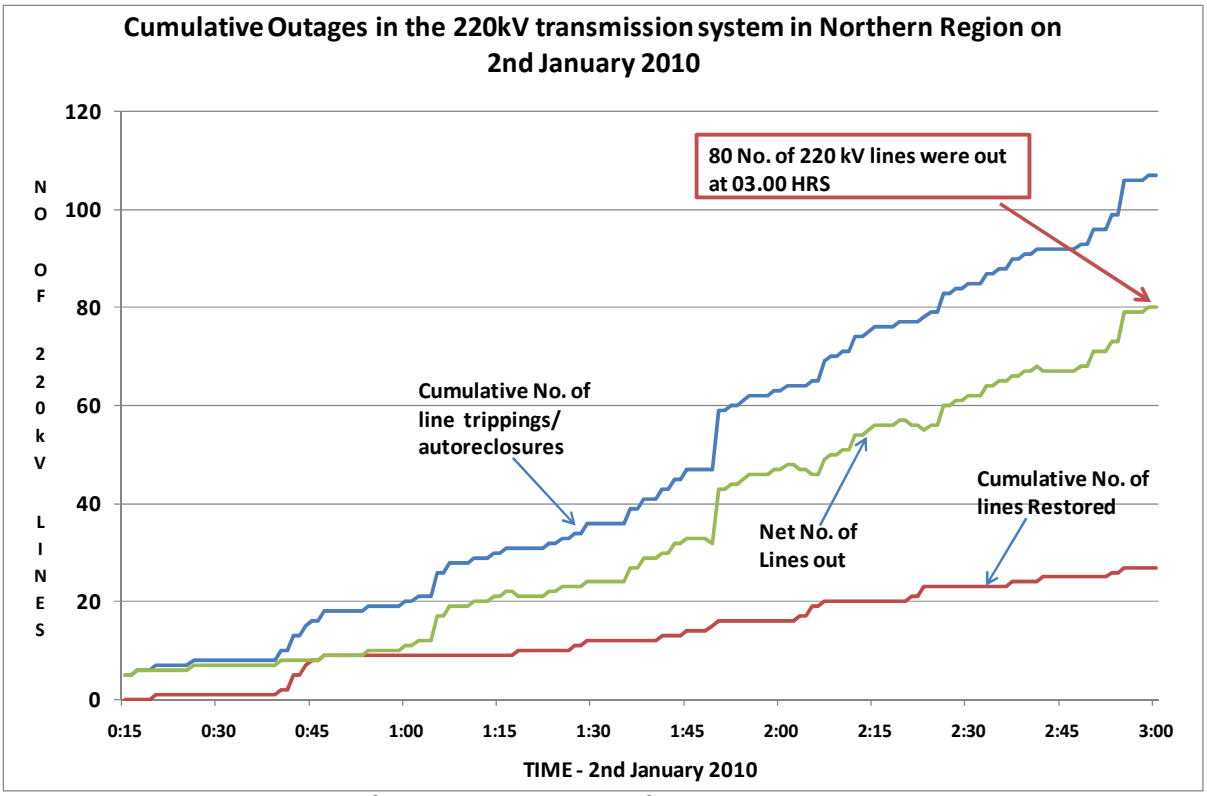

Figure-3: Cumulative Outage in 220 kV transmission system

In respect of 400 kV system above, it would be seen that efforts were made to restore the lines immediately after the trippings took place. However in respect of the 220 kV system, the cumulative net number of lines at any point of time which were out kept mounting suggesting that the Mean Time To Restore (MTTR) was quite high.

As mentioned in the preliminary report, there were several events of multiple contingencies before the system separation and collapse of sub-system at 0301 hours. These are described below.

3.2 Tripping Events in the system prior to system disturbance at 03:01 hrs.

Tripping Events in the system prior to the system disturbance are described ahead.

3.2.1 Auto-restarts on the Rihand Dadri HVDC bipole and tripping on the night of 1st January 2010:

Pole-1 of Rihand-Dadri HVDC bipole had eight autorestarts starting from 1942 hours to 2219 hours (1942, 1956, 2006, 2009, 2021, 2029, 2141 and 2219 hours). The fault locator reading in these cases was in the range of 127-128 kms. from Dadri. However Pole-1 did not trip and power flow continued uninterrupted.

Pole-2 of Rihand-Dadri HVDC had two auto-restarts at 1952 and 2031 hours followed by tripping at 2221 hours on DC differential protection at Dadri. In the two auto-restarts on Pole-2, the fault locator reading was 132 and 122 kms. respectively from Dadri. Pole-2 was restored at 2321 hours.

The above auto-restarts or tripping of Pole-2 of Rihand-Dadri HVDC bipole for one hour (from 2221 hrs. to 2321 hrs.) did not result in any contingency as the power demand in the region was low and Pole-2 of Rihand-Dadri HVDC bipole had got restored much before the other lines in the corridor viz. 400 kV Bareilly-Mandaula D/C lines started auto-reclosing. It however gives an indication of the inclement weather conditions in Western UP areas right from the late evening hours of 1st January, 2010. It has also been ascertained that though in the stretch around Dadri the insulator replacement work has been completed, the autoreclosures / trippings were in the sections beyond Dadri in the Mainpuri jurisdiction, where the insulators were not replaced with the polymer type of the insulators. This further justifies the requirement of replacement of the porcelain insulators in all the critical locations on priority basis.

3.2.2 Complete blackout of 400/220 kV Muradnagar substation at 2339 hours of 1st January 2010.

400/220 kV Muradnagar substation is a vital substation in the National Capital Region (NCR) located in Uttar Pradesh. It has five (5) 400 kV lines and five (5) 220 kV lines emanating from the substation. The 400/220 kV transformation capacity available here is 795 MVA. However the 220 kV system is effectively radial as several 220 kV loops have been kept open to control over-loading of the 400/220 kV InterConnecting Transformers (ICTs). The tripping of the 400 kV transmission system at Muradnagar occurred in the following sequence.

22:43 hrs	400 kV Muradnagar-Agra(UP) tripped.
22:44 hrs	400 kV Muradnagar-Dadri (NTPC) tripped.
23:12 hrs	400 kV Muradnagar-Panki tripped.
23:13 hrs	400 kV Muradnagar-Muzaffarnagar tripped from latter end only.
23:39 hrs	400 kV Muradnagar-Moradabad tripped from former end only.

With the above trippings, approximately 300 MW load was lost in the western UP system. Impact on the grid was however not very significant. The above trippings occurred primarily due to line faults. During the tripping of lines emanating from

Muradnagar, some instances of protection system mis-operations also came to the fore. These are as under:

i. A fault on 400 kV Muradnagar-Agra at 2211 hours leading to the tripping of 400 kV Muradnagar-Muzaffarnagar line also at the far end on Zone-1 over-reach. Fortunately there was a successful auto-reclosure of the line at Muzaffarnagar.
ii. Series capacitor on 400 kV Panki-Muradnagar line at Muradnagar end got bypassed at 2211 hours for the above fault on 400 kV Muradnagar-Agra line at 2211 hours.
iii. A fault on 400 kV Muradnagar-Panki line led to the 400 kV Muradnagar-Muzaffarnagar line tripping at the latter end on over-reach.

The above protective system mis-operations might be investigated in detail by UPPCL with respect to the relay settings. No Disturbance Recorder (DR) or Numerical Relay outputs or Event Logger (EL) outputs have been submitted by UPPCL for the above trippings and the above instances of misoperation have been reproduced from UPPCL's analysis.

The sequence of restoration of 400 kV Muradnagar substation is as under:

(2nd January 2010)

00:01	400 kV Muradnagar-Moradabad restored.
00:10	400 kV Muradnagar-Agra restored (but tripped again at 0028 hours and could be restored only at 0726 hours)
00:15	400 kV Muradnagar-Panki restored
01:02	400 kV Muradnagar-Muzaffarnagar restored.
11:20	400 kV Muradnagar-Dadri(NTPC) restored.

3.2.3 Complete outage of Panipat (Thermal) Stage-II Thermal Power Station at 01:55 hours of 2nd January 2010:

Panipat (Thermal) Stage-II TPS, Haryana has four units (2 x 210 MW + 2 x 250 MW) adding to 920 MW capacity. There are eleven (11) 220 kV circuits to evacuate power from this station. Please refer the power map of Haryana enclosed at Exhibit-3/I for a better understanding. The 220 kV network around Panipat Stage-II got progressively depleted during the early morning hours of 2nd January 2010 due to the following important line trips on fault:

0135	220 kV Nissing-Salimpur D/C section lost (0040 and 0135 hours)
0145	220 kV Nissing-Kaithal D/C section lost
0150	220 kV Safidon-Narwana D/C section lost (0135 and 0150 hours)
	220 kV Rohtak-PTPS Ckt 1 from Rohtak end
	220 kV Safidon-PTPS Ckt 1,2 and 3 from Safidon end
	220 kV Safidon-Jind Ckt 1 from Safidon end.

The trippings at 0150 hours merit closer attention as it suggests a fault at Panipat TPS end being cleared from the remote ends. Thus at 0150 hours, Panipat TPS Stage-II was weakly connected to rest of the grid. Large number of above trippings ideally should have led to automatic backing down of generation by Panipat TPS Stage-II suo-motu or on the intervention of SLDC Haryana. Subsequently, 220 kV Jind-Hisar IA D/C line tripped on distance protection with overload alarm leading to islanding of the power station and tripping of the units on overspeed. This led to a loss of 220 kV supply at 220 kV Jind, Safidon, Nissing and Rohtak (approximately 500 MW load) and 920 MW generation at Panipat Stage-II.

The outage of Panipat Stage-II generation in the North West part of the grid and the 220 kV network depletion in Haryana system placed the system in a state of higher alertness. The trippings beyond 0155 hours in Haryana 220 kV system also resulted in loss of the 220 kV parallel path from 220 kV Hisar to 220 kV Abdullapur via 220 kV Hisar-Narwana-Kaithal-Pehowa-Shahbad-Tepla-Abdullapur route. (This link got broken at 220 kV Kaithal-Pehowa section by 0255 hours).

The depletion of the Haryana 220 kV network could not be visualized adequately owing to non-availability of real time data from a number of HVPNL stations. No detailed report on the above incident with DR/EL and numerical relay outputs have been forwarded by HVPNL and the above sequence had to be derived only from the list of line trippings submitted by HVPNL without any analysis as to whether these trippings were in order or not.

3.2.4 Outage of 400 kV Bus-I at Ballabgarh (PG) substation at 0255 hours:

At 0255 hours, there was a R-B phase fault on 400 kV Ballabgarh-Bamnauli-2 line. At that point of time this was the only infeed to Bamnauli (as the 400 kV D/C connection to Bawana had got snapped at 0137 and 0222 hours while the Ckt 1 to Ballabgarh tripped at 0153 hours on single phase to ground faults) and was feeding a radial load of approximately 300 MW to south west Delhi. This fault was sensed by the distance protection at Ballabgarh. However while all the poles of the 400 kV Bus-2 breaker at Ballabgarh for Bamnauli-2 feeder got opened, R-pole of the 400 kV Bus-1 breaker of the Bamnauli feeder at Ballabgarh did not open leading to operation of

the Local Breaker Backup (LBB) of this breaker and isolation of 400 kV Bus-1 at Ballabgarh. (Please refer Single Line diagram of Ballabgarh substation for ease of understanding). No proper DR or EL output is available from 400/220 kV Bamnauli substation for this tripping.

As the 400 kV Ballabgarh (PG) substation has a breaker and half switching scheme and all tie breakers were in service, this outage of 400 kV Bus-1 through tripping of all breakers connected to this bus did not lead to any further element outage. The other elements continued to remain connected with the grid through the tie breaker or 400 kV Bus-2 breakers.

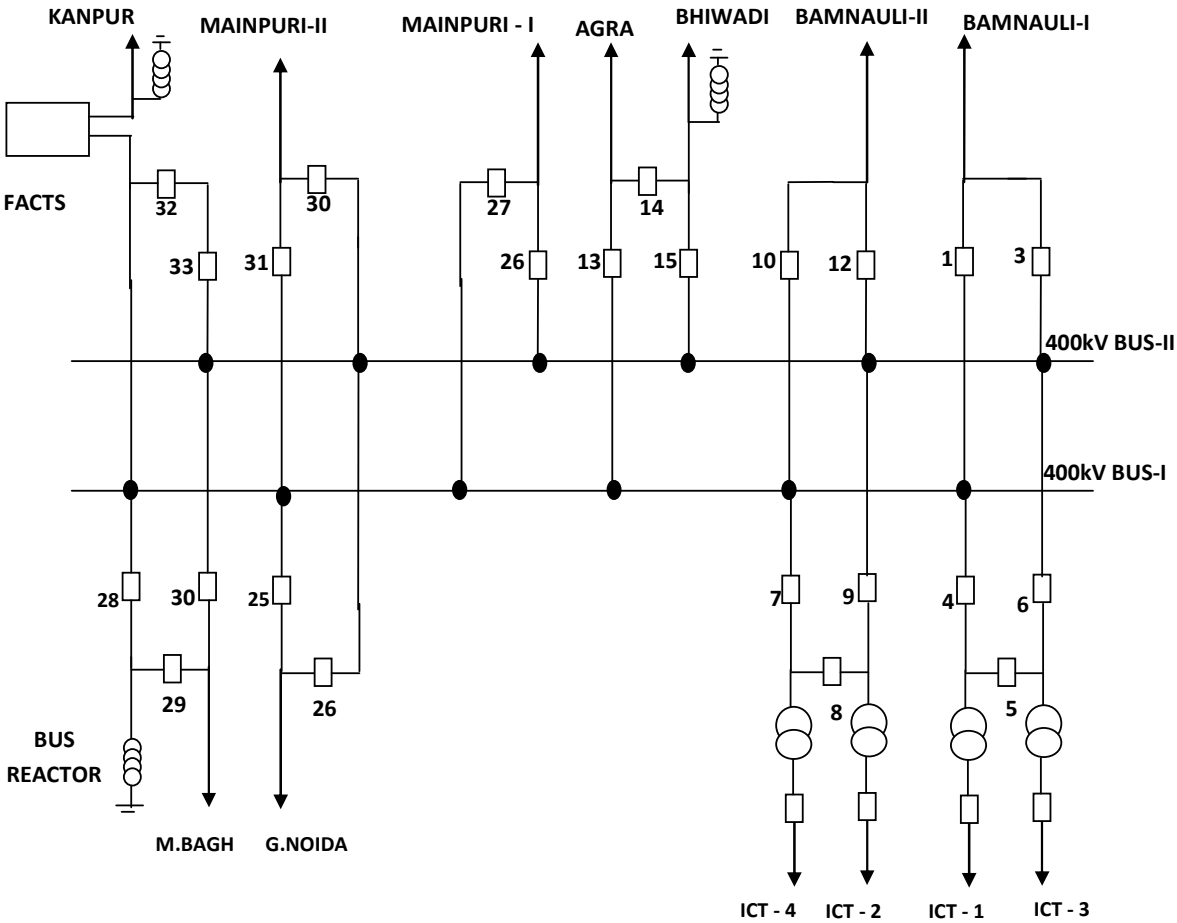

Figure 4: Single Line Diagram (SLD) of 400 kV Ballabgarh substation

The Numerical relay and Event Logger output of this line at Ballabgarh end is enclosed at Exhibit-3/II. It is seen that the fault has been cleared within 250 ms (corresponding to distance protection operation plus LBB timer) after isolation of 400 kV Bus-1 as explained above. The Event Logger also shows that the R-pole of the 400 kV Bus-1 breaker for Bamnauli-2 feeder has opened three seconds later on pole discrepancy. It was this stuck breaker that caused LBB protection to operate. Delhi

Transco Limited (DTL) and POWERGRID might jointly examine the reasons for delayed opening of the 400 kV Bamnauli-2 Bus-1 breaker at Ballabgarh end and take remedial measures accordingly.

Apart from this blackout at Bamnauli at 0255 hours, 400/220 kV Bamnauli substation had also suffered a blackout earlier from 0222 hours to 0240hrs.

3.2.5 Efforts to reduce the import of North-West part of the system

Thus apart from the 220 kV and 400 kV line trippings occurring in the system as stated earlier, the above events brought out the weaknesses in the protective system and also placed the system in a state of emergency. NRLDC had to take actions by way of making efforts to reduce the import of the North West part of the system (Punjab/Haryana/HP/J & K) by way of increasing generation in this part (Chamera-1 and Jhakri) and reducing the load in order to enhance the system security.

3.3 Sequence of events leading to a split in the system at 0301 hours

The same has already been explained in the preliminary report and is further elaborated in this section. If we look into the transmission network connecting the affected area which finally separated from rest of the grid and collapsed at 0301 hrs., the following 400 kV/220 kV links form the separating corridor and in this the line sections going out have been highlighted.

400 kV Links

1. 400 KV Hissar- **Fathehabad-Moga**-Jallandhar
2. 400 KV Hissar –**Khedar-Moga**-Jallandhar
3. 400 KV **Hissar- Patiala-Nalagarh-Jhakri**-Abdullapur
4. 400 KV **Hissar- Kaithal-Nalagarh-Jhakri**-Abdullapur
5. 400 KV Hissar- **Bhiwani- Dehar**-220 kV Ganguwal
6. 400 kV **Panipat-Dehar**-220 kV Ganguwal
7. 400 KV Patiala-**Malerkotla-Dadri**

220 KV Links

1. 220 kV Panipat-Dhulkote-Ganguwal D/C
2. 220 KV Panipat-Kurukshetra-Jagadhari-Ganguwal
3. 220 KV Hissar-Sangrur-1
4. 220 KV **Hissar-Sangrur-2**

Hence looking specifically into the affected area, as antecedent conditions the transmission network across the axis of separation was already depleted due to outage of following ckts:

Table 6: Lines that were already out in the Axis of Separation

S.No	Name of line	Status at 0253 hours
1	400 kV Hissar-Patiala	Out since 0507 hours of 1st Jan 2010
2	400 KV Jhakri-Nalagarh-1	Opened at 2050 hours of 1st Jan 2010
3	400 kV Panipat-Dehar	Tripped at 0001 hours of 2nd Jan 2010
4	400 kV Hissar-Kaithal	Tripped at 0136 hours of 2nd Jan 2010
5	400 kV Bhiwani-Dehar	Tripped at 0151 hours of 2nd Jan 2010
6	220 kV Panipat-Dhulkote-1	Tripped at 0207 hours of 2nd Jan 2010
7	220 kV Panipat-Dhulkote-2	Tripped at 0227 hours of 2nd Jan 2010
8	400 kV Fatehabad-Moga	Tripped at 0229 hours of 2nd Jan 2010
9	220 kV Panipat-Kurukshetra	Tripped at 0236 hours of 2nd Jan 2010

As would be seen from the above, six (6) 400 kV and three (3) 220 kV links in this cross section were out with six lines going out in rapid succession between 0136 hours to 0236 hours.

3.3.1 Tripping of 400 KV Bawana-Abdullapur-2 and radial operation of Jhakri HPS:

At 02:54:57:125 (as per NRLDC Sequence of Events log) hours, 400 kV Bawana-Abdullapur-2 tripped on Y-phase to ground fault, 100 kilometres from Abdullapur. The fault was cleared by tripping of the Y-pole breaker. The Y-pole autoreclosed immediately after the 1 second dead time but all three phases tripped at 02:54:58:378 due to persistent fault. DR output of this circuit at Abdullapur end is enclosed at Exhibit-3/III. As a result of this tripping, the Jhakri and Yamuna Nagar TPS remained connected with the grid only through 400 kV Jhakri-Nalagarh-Patiala link (on account of the trippings in Haryana system explained in section 3.2.3 above). With this, the power flow across the depleted axis feeding Punjab/ North Haryana/ HP /J & K/ UT Chandigarh system at 0255 hours was as under:

i.	400 kV Dadri-Malerkotla	:	590 MW
ii.	400 kV Jhakri-Nalagarh-2	:	410 MW
iii.	400 kV Hissar-Khedar-Moga	:	640 MW
iv.	220 kV Hissar-Sangrur-1	:	110 MW
v.	220 kV Hissar-Sangrur-2	:	110 MW
	Total	:	1860 MW

400 kV Jhakri-Nalagarh-2 was essentially a radial feed to the North West part of the grid during the above instance on account of loss of connectivity between 220 kV

Hissar and Abdullapur due to outages in the 220 kV HVPNL system. This aspect could however could not be visualized adequately on account of non-availability of real time data from the HVPNL system, more so when several contingencies kept happening in close succession (the tripping of 400 kV Bus-1 at Ballabgarh described at section 3.2.4 above occurred within three seconds of this tripping).

3.3.2 Tripping of Complete Ropar TPS

Around this instant, another contingency occurred in the Punjab system. Ropar TPS (RTP) in Punjab has an installed generating capacity of 1260 MW (6 x 210 MW). The power station has ten (10) 220 kV lines for evacuation and all the six generating units were operating during the night hours. (Please refer power map of Punjab at Exhibit-3/IV). The 220 kV transmission system was tripping progressively as under on 2nd January 2010 unless mentioned otherwise:

0111/1st Jan 2010	220 kV RTP-Sahnewal
0155	220 kV RTP-Govindgarh-4
0223	220 kV RTP-Govindgarh-1
0251	220 kV RTP-Govindgarh-2
0254	220 kV RTP-Jamsher

Ropar TPS was therefore left with only the following 220 kV lines for evacuation:

- 220 kV RTP-Kohara
- 220 kV RTP-Govindgarh-3
- 220 kV RTP-Goraya
- 220 kV RTP-Mohali-1
- 220 kV RTP-Mohali-2

The generation at Ropar TPS at 0255 hours was 977 MW (net). Around 0256 hours, 220 kV Mohali-Rajpura D/C and 220 kV Ganguwal-Mohali circuits have reportedly tripped and effectively making the 220 kV RTP-Mohali D/C radial. At the same instance, the power station has got islanded (possibly on account of line trips beyond Goraya and Govindgarh) and the units have reportedly tripped on overspeed. As per the output from the Historical Tabular Trending of Ropar TPS, the units 3, 4, 5 and 6 have got islanded at 02:56:31 hours and within the next two seconds, the frequency has shot up to 55 Hz leading to tripping of the units on overspeed.

The Tabular Trends for these units (which appear to be time synchronized) is enclosed at Exhibit-3/V. In respect of units 1 and 2, the output from the Data

Acquisition System (DAS) of these units are enclosed at Exhibit-3/VI . This output also indicates that the units have tripped on overspeed.

It might be seen from the above that adequate backing down of generation had not been carried out by Ropar TPS/SLDC Punjab despite the 220 kV network in Punjab getting depleted, leading to the above outage. While PSEB had submitted the DR/EL and other outputs from power stations, no attempt had been made by SLDC Punjab to independently analyze the events and the above conclusions are based on going through the raw data made available by PSEB.

3.3.3 Tripping of 400 KV Khedar-Moga Ckt. on over-current protection

The above outage of Ropar TPS resulted in a deficit in the North West pocket comprising Punjab/North Haryana/HP/J & K system. The next event as per the Sequence of Events recorded at NRLDC is the tripping of 400 kV Khedar-Moga line at 02:56:32:389. As per the REL 670 Numerical Relay output of this line at Khedar end (which is time synchronized and enclosed at Exhibit-3/VII), the current on this line just before tripping was 1.3 kA or 1300 amps and the power flow was of the order of 880 MVA (3 x 225 kV x 1.3 kA). As mentioned in Section 3.3.1 above, the power flow on this line at 0255 hours was 640 MW and the increase in power flow to 880 MVA was mainly on account of tripping of Ropar TPS at 02:56:31 hours.

The above power flow of 1.3 kA and 880 MVA is much less than the thermal rating of this circuit which is 2.6 kA at 10^0 C ambient temperature. Therefore the tripping of this line at this power flow of 880 MW is not in order. It is observed from the relay output that the tripping has occurred on account of overcurrent protection which has reportedly been set at 1.0 kA.

Over-current protection on 400 kV lines is not a desirable feature. In fact section 2 of the CBIP Publication no. 274 'Manual on Protection of Generators, Generator Transformers and 220 kV and 400 kV networks' has not recommended any such protection for 400 kV lines. In case such a feature has been enabled, it can lead to unintended operations or surprises during a contingency and can aggravate the situation leading to a widespread failure. In the Northern region, existence of such a protection on one of the 400 kV sections in the Delhi ring main system had led to a grid disturbance on 12th October 2007 and a blackout in Punjab/Haryana/HP/J & K system. After this disturbance, the Protection sub-committee of NRPC specifically directed all the utilities to block the over-current protection on 400 kV lines. It appears that the requisite checks had not been done during commissioning of the line on 31st July 2009, which was done as an interim arrangement by Loop-In-and Loop Out (LILO) of 400 kV Hissar-Moga line at Khedar. This arrangement was required in connection with the commissioning of units at Rajiv Gandhi Thermal

Power Station (RGTPS). Till date, there has been no written confirmation from HVPNL that the overcurrent setting on the distance protection of 400 kV Khedar-Moga line has been disabled.

3.3.4 Low voltages in Punjab System

The above unintended tripping of 400 kV Khedar-Moga led to severe drop in voltages in Punjab/North Haryana system (below 360 kV) on account of heavy loading (>800 MW) on the 400 kV Dadri-Malerkotla line leading to high reactive power losses of the order of 1000 MVAR. While the operator at NRLDC could observe this low voltage of the order of 360 kV, the high MW loading did not appear on the screen on account of the 1000:1 Current Transformer (CT) ratio adopted at both ends of this line, which led to the values getting frozen at around 600 MW.

While the reactive power flows on transmission lines are not monitored very closely, as the same is not very significant under normal line loading conditions, the same assumes great importance when the transmission network is loaded heavily. After the incident, the Historical Data Replay at NRLDC revealed high MVAR drawn by the 400 kV Dadri-Malerkotla line from both ends between 0256 to 0301 hours. This is illustrated in **Figure 5**.

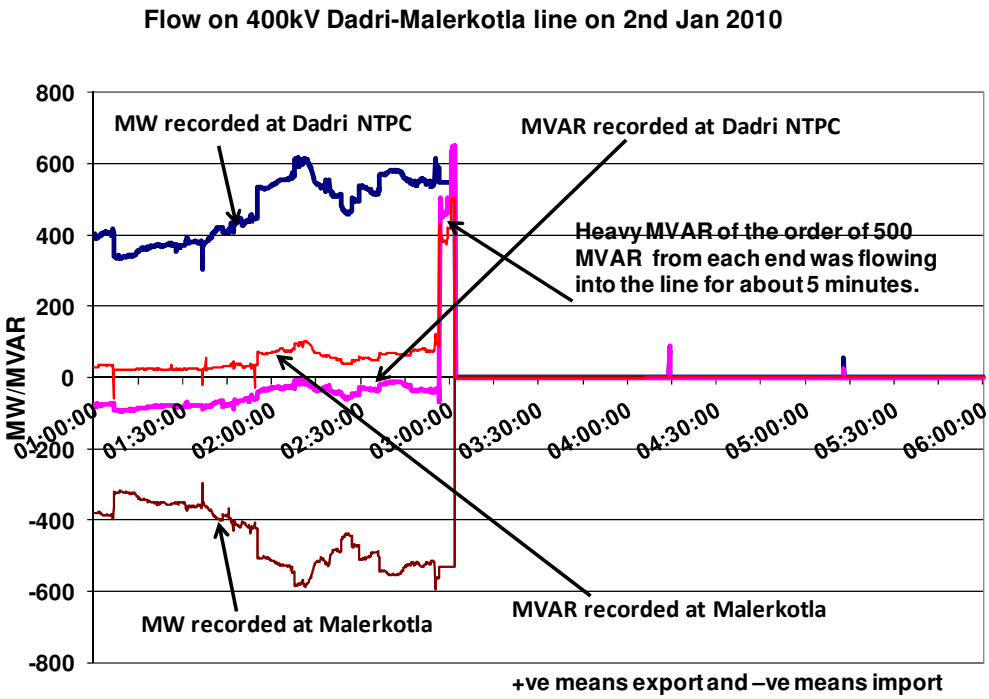

Figure 5: MW and MVAR flow on 400 kV Dadri-Malerkotla line on 2nd January 2010

Initially this seemed to suggest an uncleared fault on the line (as there was an incident of an uncleared fault on 400 kV Dadri-Panipat-1 for close to 2 minutes 50 seconds on 22nd Sep 2008). Subsequently, through off-line simulation, it was seen that the high reactive power drawn by the line would occur at high level of MW loadings. In this case, while the SCADA data shows that the MW values had frozen at around 550 MW, the actual power flow on 400 kV Dadri-Malerkotla line would have been much above 1000 MW. The reactive power drawn by the line vis-à-vis line current is illustrate graphically below in **Figure 6**.

The Historical Data Recording (HDR) also indicates that the flow on 220 kV Hissar-Sangrur D/C initially increased from 220 MW to 380 MW and thereafter to 690 MW. The voltage at Sangrur and Hissar also dipped by 25 kV-30 kV on account of approx. 360 MVAR reactive power losses on this line.

The reactive power requirements under such a situation would have to be met from the generators nearby such as Dadri NTPC, Lehra Mohabat TPS, GNDTP, Yamuna Nagar TPS, Chamera-I and Jhakri HPS. Outage of the generating units at Ropar TPS and Panipat TPS Stage-II in this incident caused a shortfall in dynamic reactive reserves available leading to a higher voltage drop. Under Voltage Load Shedding (UVLS) assumes great importance in such situations. Absence of this defense plan can lead to a situation of voltage collapse.

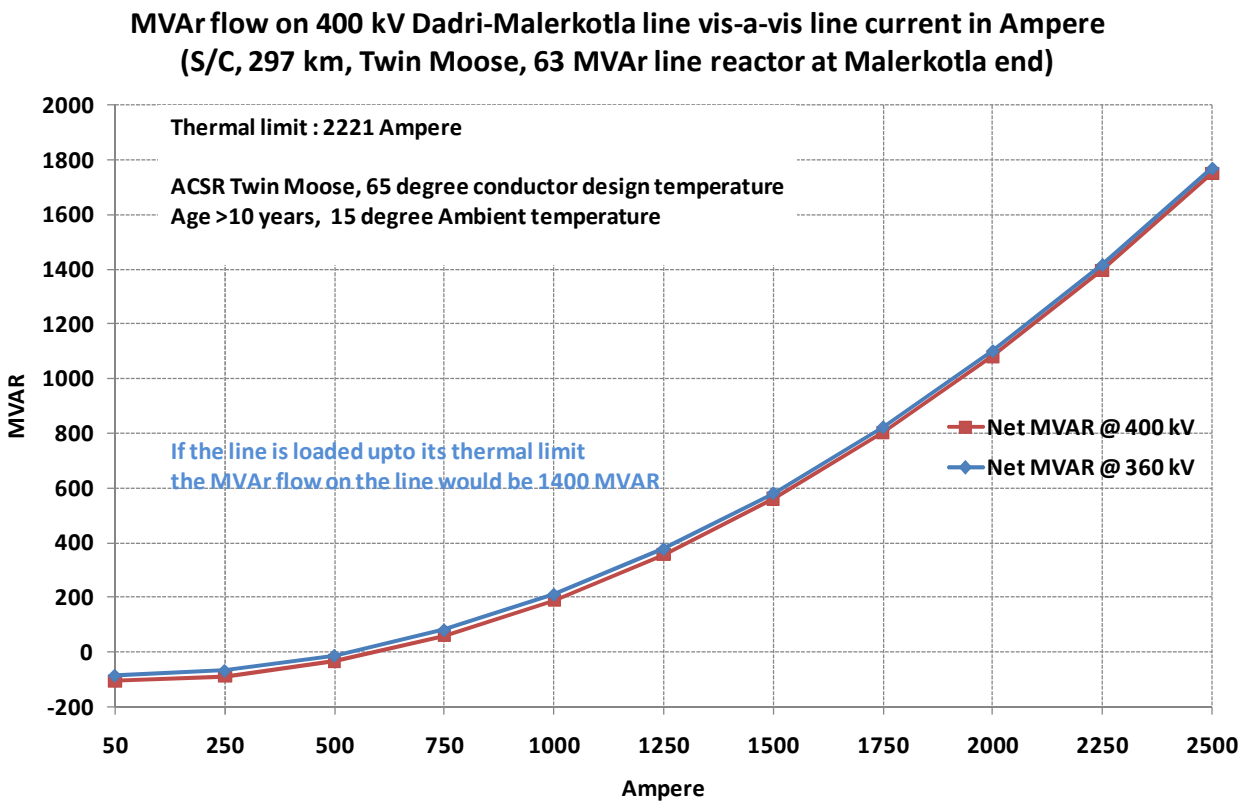

Figure 6: MVAR losses on 400 kV Dadri-Malerkotla line with increase in loading

3.3.5 Separation and collapse of Punjab / North Haryana / HP / UT Chandigarh and J & K System:

The next set of cascade tripping as per the NRLDC Sequence of Events (SOE) is as under:

03:01:41:459	220 kV Hissar-Sangrur-2 tripped from Sangrur end. No DR or Numerical relay output has been submitted by BBMB for this tripping.
03:01:42:221	220 kV Hisar-Sangrur-1 tripped from Sangrur end. No DR or Numerical relay output has been submitted by BBMB for this tripping.
03:01:42:705	400 kV Jhakri-Nalagarh-2 tripped. The Numerical Relay outputs of 400 kV Jhakri-Nalagarh-2 at Jhakri (Exhibit-3/VIII) shows a sharp dip in voltage to zero with the current of the order of 1.2 kA).
03:01:43:484	400 kV Dadri-Malerkotla tripped. The Numerical Relay output at Malerkotla Exhibit-3/IX shows the voltage dipping to 270 kV phase to phase and the current of the order of 2.6 kA just before tripping). EL at Malerkotla end also enclosed.

This led to separation of the Punjab/North Haryana/HP/UT Chandigarh/J&K system from the main NEW grid. The axis of separation is pictorially indicated at Exhibit-3/X. There was a deficit of approximately 1850-1900 MW in this separated portion and it collapsed leading to a loss of approximately 7500 MW load (including loads already affected due to prior fog related trippings). A small portion of HP system remained connected with Uttarakhand system and survived. Within Uttarakhand system, loss of supply to 220 kV Roorkee substation at 0302 hours from Nara led to about 110 MW generation at Chilla, Pathri and Mohammadpur getting affected for 25 minutes and about 296 MW getting interrupted for 65 minutes. This incident is not related to the main incident at 0301 hours.

It would thus be seen that within five minutes of tripping of 400 kV Khedar-Moga line, tripped reportedly on account of an incorrect relay setting, the systems separated and collapsed. The reasons for the same have been explained in Section 4.

In rest of the NEW grid, the frequency shot up to 51.2 Hz and the situation was controlled by backing down generation at Singrauli, Rihand and Unchahar thermal power stations. System voltage also shot up on account of the load rejection caused due to separation of system above. The frequency remained under check mainly because of the large size of the NEW grid with the flexibility to export more power to

Southern region. The angular separation between the North and West bus at Vindhyachal HVDC back to back station is indicated in **Figure 11** in Section 4 of this report.

However, primary response through the governing system would definitely have helped the situation further else secondary collapses in the unaffected system on account of high frequency and high voltage cannot be ruled out.

x----x----x

SECTION 4

Analysis of the grid disturbance at 21:54 hours on 2nd Jan 2010

4.1. Antecedent conditions:

Section-3 of this report indicates the sequence of events culminating in the disturbance at 0301 hours of 2nd January 2010. As would be seen from Section-6 of this report, the last of the thermal units at Ropar TPS in Punjab were synchronized by 1800 hours while in Haryana, the units at Yamuna Nagar TPS were synchronized at 2100 and 2121 hours only.

The Northern Region was meeting a demand of 25400 MW at 2100 hrs. of 2nd Jan 2010 which was about 1300 MW less than on a normal day. This was primarily the effect of the grid disturbance at 0301 hrs. As far as the transmission network was concerned, all the trunk transmission lines were restored barring the 400 kV Bhiwadi-Hissar line which went under breakdown at 0542 hrs. of 2nd Jan 2010 due to bending of a tower cross arm at location no. 134.

Following are the 400 KV/220 KV links separating the affected area from the rest of the grid during this incident. (Part of HP system remained connected through Uttrakhand system)

400 KV Links

1. 400 KV Bhiwadi-Hissar
2. 400 KV Bawana-Hissar
3. 400 KV Bawana-Bahadurgarh-Bhiwani-Hissar
4. 400 kV Bawana-Abdullapur D/C
5. 400 KV Dadri-Malerkotla
6. 400 KV Dadri-Panipat D/C

220 KV Links

1. 220 kV Khetri-Hissar
2. 220 KV Khetri-Charkhi Dadri D/C
3. 220 KV Ballabhgarh-Charkhi Dadri
4. 220 KV Samaypur-Charkhi Dadri

In view of the fact that the thermal units in Punjab were synchronized only during the evening or early night hours, the power flow across the above section was higher than on a normal day. At 21:44 hours just before the trippings commenced, the power flow across the above cross section was as under:

1.	400 KV Bhiwadi-Hissar	0	MW
2.	400 KV Bawana-Hissar	538	MW
3.	400 KV Bawana-Bahadurgarh	521	MW
4.	400 kV Bawana-Abdullapur D/C	543	MW
5.	400 KV Dadri-Malerkotla	419	MW
6.	400 KV Dadri-Panipat D/C	684	MW
7.	220 kV Khetri-Hissar	146	MW
8.	220 KV Khetri-Charkhi Dadri D/C	370	MW
9.	220 KV Ballabhgarh-Charkhi Dadri	124	MW
10.	220 KV Samaypur-Charkhi Dadri	123	MW
	Total	**3468**	**MW**

The subsequent sections describe the sequence of events leading to the separation along the above axis and collapse of the Punjab/Haryana/HP/J & K system. The Sequence of Events (SoE) recorded at NRLDC is enclosed at Annexe-4/I.

4.2. Events starting from 2144 hrs. leading to the disturbance at 2154 hrs.

For the sake of understanding please refer **Figure 7** and **Figure 8** below.

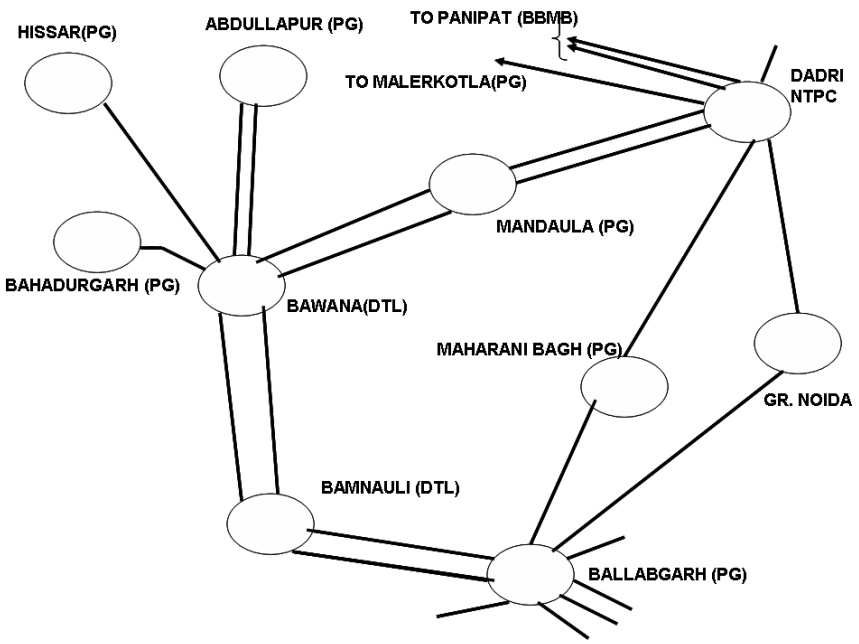

Figure 7: Sketch of 400 kV Delhi ring main system

4.2.1 Tripping of 400 KV Bamnauli-Ballabhgarh Ckt.-2

The first event recorded in the Sequence of Events at NRLDC was the tripping of 400 kV Bamnauli-Ballabgarh-2 at 21:44:09:255 (at Bamnauli end) and at 21:44:09:288 at Ballabagarh end. The Numerical Relay output at Ballabgarh end of this line indicates a R-phase to ground fault on the line. (Exhibit-4/I). Although Main-1 protection operates at this end, the fault is seen for a period of 300 msec (15 cycles). It is seen from the NRLDC SOE (Annexe-4/I) that the fault has apparently cleared from Ballabgarh end only after operation of the Local Breaker Backup (LBB) of 400 kV Bus-1. This has happened as the R-pole of 400 kV Bus-1 breaker of Bamnauli-2 circuit at Ballabgarh end has failed to open after operation of distance protection. Although the fault was cleared in 300 msec due to 400 kV Bus-1 trip, the Numerical Relay output shows that the R-pole of this breaker has opened 3 seconds after the occurrence of fault on pole discrepancy.

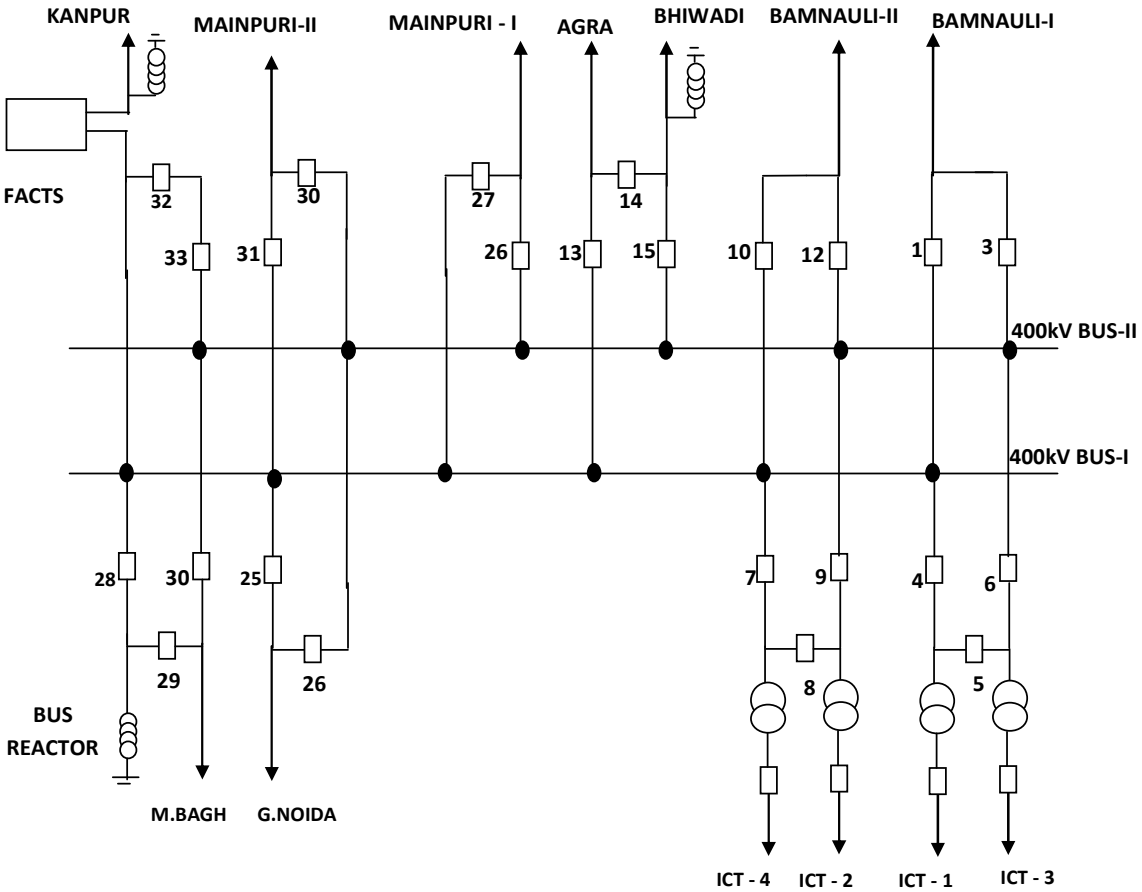

Figure 8: Single Line Diagram (SLD) of 400 kV Ballabgarh substation

Thus the fault is cleared through three phase trip at Ballabgarh end at 21:44:09:530 (400 kV Bus-1 LBB) and at 21:44:09:591 at Bamnauli end (only one breaker viz. 352

connected to 400 kV Bamnauli bus-1 was in service at Bamnauli end). The clearance of fault from Bamnauli end cannot be established independently as proper Disturbance Recorder (DR) or Numerical Relay output for this tripping was not available from Bamnauli. The LBB action of 400 kV Bus-I at Ballabgarh due to delay in opening of R-pole of the Bamnauli-2 circuit breaker needs to be investigated jointly by DTL and POWERGRID as the incident has occurred for the second time on 2nd January 2010; the first occurrence at 0255 hours earlier as described in Section-3.0 of this report.

The outage of 400 kV Bus-1 at Ballabgarh did not lead to any further outage although it did divert the attention of the system operator at NRLDC who had to assess the situation and rule out any further outage.

4.2.2 Tripping of 400 KV Bambauli-Ballabhgarh Ckt. I

Almost at this time, the 400 kV Bamnauli-Ballabgarh-1 tripped from both ends as per the following timings recorded in the NRLDC SoE:

21:44:09:540	400 kV Bamnauli-1 Bus-1 breaker at Ballabgarh opens.
21:44:09:567	400 kV Ballabgarh-1 Bus-2 breaker at Bamnauli opens.
21:44:09:608:	400 kV Ballabgarh-1 Bus-1 breaker at Bamnauli opens.
21:44:09:705	400 kV Bamnauli-1 Bus-2 breaker at Ballabgarh opens.

The line has tripped at Ballabgarh end on direct trip received from Bamnauli. The Numerical Relay and Event Logger output from Ballabgarh is enclosed at Exhibit-4/II. This shows that the distance protection has not picked up at Ballabgarh end. The reasons for direct trip command being received at Ballabgarh from Bamnauli-1 needs a detailed investigation, particularly as there is no proper DR or EL output available from Bamnauli substation. The distance protection on this line at both ends may be thoroughly tested jointly by DTL and POWERGRID.

4.2.3 Voltage dip observed around Delhi System

The above events might seem to suggest that the faults on both the 400 kV circuits between Ballabgarh and Bamnauli have been cleared successfully from both ends. However, the power system experienced severe low voltages. Voltage dropped to critically low level at various nearby 400 kV BUS as given below:

400 kV Dadri NTPC	399 kV to 356 kV
400 kV Mandola	395 kV to 339 kV
400 kV Bawana	399 kV to 333 kV
400 kV Maharani Bagh	396 kV to 362 kV
400 kV Meerut	399 kV to 352 kV

400 kV Malerkotla	404 kV to 374 kV
400 kV Hissar	395 kV to 370 kV
400 kV Abdullapur	398 kV o 363 kV

Voltage drop of the order of 50 to 70 kV are seen within a second. The following trippings took place.

4.2.4 Tripping of 400 KV lines from Bawana to Haryana System from remote end leading to (N-4) contingency

Time	Event
21:44:15:750	400 kV Bahadurgarh-Bawana trips from Bahadurgarh (PG) end only on directional earth fault available in Main-1 protection. (timings as per Event Logger at Bahadurgarh; 21:44:15:435 as per the Numerical Relay output at Bahadurgarh). Both these outputs enclosed at Exhibit-4/III. Neutral current observed on this line is of the order of 500 amps with no significant drop in phase voltages or rise in phase currents.
21:44:19:717	400 kV Hissar-Bawana trips from Hissar end only on Main-2 distance protection operation B-phase. Timings as per NRLDC SOE which is time synchronized. Timing as per Hissar EL 21:44:19:610. The directional earth fault element appears to have picked up considering that neutral current on this line was 778 amps with no significant drop in phase voltages or rise in phase currents. Both these outputs are enclosed at Exhibit-4/IV.
21:44:20:956	400 kV Abdullapur-Bawana-2 trips from Abdullapur end. Timings as per NRLDC SoE. Numerical Relay and EL output for this tripping from Abdullapur end enclosed at Exhibit-4/V. This indicates that the line has tripped on Main-1 protection. It is seen from the output that that there is no significant drop in phase voltages or rise in phase currents and the neutral current is of the order of 284 amps leading to the directional earth fault element picking up.
21:44:21:009	400 kV Abdullapur-Bawana-1 trips from Abdullapur end. Timings as per NRLDC SoE. Numerical Relay and EL output for this tripping from Abdullapur end enclosed at Exhibit-4/VI. This indicates that the line has tripped on Main-1 protection. It is seen from the output that there is no significant drop in phase voltages or rise in phase currents and neutral current is of the order of 491 amps leading to the directional earth fault element picking up.

The fact that the above four lines have tripped on directional earth fault at the ends remote from 400 kV Bawana substation suggests an uncleared fault beyond Bawana towards Bamnauli or Mandaula. However no tripping at this instance at Mandaula or beyond Mandaula suggests that the uncleared fault was towards Bamnauli.

The above tripping has led to more than 1600 MW power flow to the North West part of the grid from Bawana getting disrupted and this had to flow on the other parallel paths from Dadri NTPC (400 kV system), Ballabgarh (PG) 220 kV system and through the Rajasthan system. This was effectively an (N-4) contingency occurring within a minute (before any operator actions could be initiated) for which the power system has not been planned. This led to heavy loading on the 220 kV lines from Rajasthan system towards Haryana and the trippings as explained below occurred as per the SoE recorded at NRLDC.

The heavy loading on the 400 kV Dadri-Malerkotla and Dadri-Panipat D/C sections could not be visualized by the operator at NRLDC as the values got frozen on account of the current crossing 1000 amps and the 1000/1 CT ratio adopted for measurement.

4.2.5 Tripping of 220 kV ckts. from Rajasthan towards Haryana leading effectively to an (N-6) contingency.

Time	Event
21:44:26:360	220 kV Hissar-Khetri trips from Khetri end. No DR or EL output made available from Khetri substation of RVPNL. However the relays settings might be checked to ensure that any conservative 'overcurrent' settings are eliminated after ascertaining the reasons for trippings.
21:44:36:419	220 kV Charkhi Dadri-Khetri-1 trips from Khetri end. No DR or EL output made available from Khetri substation of RVPNL. However the relays settings might be checked to ensure that any conservative 'overcurrent' settings are eliminated after ascertaining the reasons for trippings.
21:44:36:436	220 kV Charkhi Dadri-Khetri-2 trips from Khetri end. No DR or EL output made available from Khetri substation of RVPNL. However the relays settings might be checked to ensure that any conservative 'overcurrent' settings are eliminated after ascertaining the reasons for trippings after ascertaining the reasons for trippings.

4.2.6 Tripping of 400 KV Dadri-Panipat ckt.-2 leading to an (N-7) contingency.

At this same instance, the 400 kV Dadri-Panipat-2 line has also tripped. This has not appeared in the NRLDC SoE but is derived from the Historical data Recording (HDR) facility. The Numerical Relay output available from Dadri NTPC indicates that the line has tripped on operation of Main-2 protection which is MICOM P437 Numerical Relay of AREVA make (Exhibit-4/VII). On examining the output, it is observed that the tripping has occurred on account of Zone-5 which got activated at 21:44:36:831 as per this relay timings (no confirmation that this timing is GPS synchronized) and matches with the above sequence of trippings at Bawana/Rajasthan system.

Zone-5 tripping at Dadri NTPC end is clearly a misoperation. This setting ought to have been blocked ideally but had been activated. In a similar tripping on 12th October 2007, which had led to a blackout in the North West part of the Northern Grid, this relay had operated due to 'overcurrent start' feature getting enabled as soon as the current in the line crossed 1000 amps. NTPC had subsequently raised this setting to 10 kA to ensure that this feature does not get triggered during contingencies when loading on the line increases. Despite this, it appears that a comprehensive check of all potential threat to the system from such unintended operations was not done leading to the present tripping on Zone-5.

A similar threat from other numerical relays in the system cannot be ruled out completely and a comprehensive check has to be made by all utilities to see that all unintended settings or features available in Numerical Relays are blocked or disabled. As seen in Section-3 of the report, unintended tripping of 400 kV Khedar-Moga line had occurred during the early morning hours of 2nd Jan 2010 on account of the 'overcurrent' feature being enabled at Khedar end.

4.2.7 Effect on the NR grid on account of above trippings

Thus within a minute, the system experienced an (N-7) contingency which was an unprecedented event for which the system has not been planned. Above trippings led to only the following elements connecting Punjab/Haryana/HP/J & K system to rest of the grid from 21:44:37 hours.

- 400 kV Dadri-Malerkotla
- 400 kV Dadri-Panipat-1
- 220 kV Samaypur-Charkhi Dadri
- 220 kV Ballabgarh-Charkhi Dadri

The heavy power flow on the above 400 kV lines could not be adequately visualized at NRLDC as the analog readings became suspect on account of the 1000/1 Current Transformer (CT) ratio adopted for various 400 kV lines. The

operator at NRLDC could however see the drop in bus voltages mentioned in 4.2.3 above which would have been on account of two factors:

- Reactive power requirement to feed the high active power flows on the above 400 kV and 220 kV lines.
- An uncleared fault at Bamnauli indicated by the 1600-1800 MVAR (with low MW value) flowing on the 400 kV Bawana-Bamnauli D/C section.

The reactive power requirements under such a situation would have to be met from the generators nearby such as Dadri NTPC, Lehra Mohabat TPS, Ropar TPS, GNDTP, Yamuna Nagar TPS, Panipat TPS, Chamera-I and Jhakri HPS. Outage of the generating units at Ropar TPS and Panipat TPS Stage-II in this incident caused a shortfall in dynamic reactive reserves available leading to a higher voltage drop. Under Voltage Load Shedding (UVLS) assumes great importance in such situations. Absence of this defense plan can lead to a situation of voltage collapse.

The Historical Data Recording (HDR) at NRLDC indicates that low voltage and high MVAR flow on the 400 kV Mandaula-Bawana-Bamnauli D/C section occurred from 21:44:09 to 21:46:00 hours or approximately two (2) minutes. NRLDC immediately directed for emergency load shedding in Punjab/Haryana system.

The analysis of this period is covered in the next paragraph.

4.3. Nature of the sustained fault in the system fed from 400 kV Bamnauli substation and how did it get finally cleared in about two (2) minutes:

As stated above, the SCADA system at NRLDC indicated heavy reactive power flows in and around Dadri NTPC. **Figure 9** below indicates snapshot from the Historical Data Recording (HDR) facility at NRLDC taken at 21:45:02 hours is indicated below which shows the low voltages (in box) and heavy MVAr flow on 400 kV Bawana-Bamnauli D/C line towards Bamnauli (978 and 996 MVAr each on Ckt 1 and Ckt 2). 400 kV Bamnauli voltage displayed here is incorrect. For a better understanding of the event, it is also suggested that the Single Line Diagram of 400/220 kV Bamnauli substation at **Figure 10** is referred.

Figure 9: Snapshot from the SCADA system of NRLDC at 21:45:02 hours

The heavy MVAR flow coming from Bawana towards Bamnauli can flow either towards Ballabgarh at 400 kV or through the 400/220 kV 4 x 315 MVA ICTs at Bamnauli depending on where the uncleared fault is prevailing. It is seen from the SoE at NRLDC that ICTs 3 and 4 have tripped immediately after the fault on the 400 kV Bamnauli-Ballabgarh section described in section 4.2.1 and 4.2.2 above. DTL has stated that the ICTs have tripped on directional overcurrent. As per the SoE, the following trippings have taken place at Bamnauli.

Time	Details
21:44:10:225	220 kV Bamnauli-Dwarka-1 trips from Dwarka end on directional earth fault
21:44:10:270	220 kV Bamnauli-Dwarka-2 trips from Dwarka end on directional earth fault
21:44:11:290	220 kV Bamnauli-Mehrauli D/C trips from Mehrauli end
21:44:13:725	ICT-3 at Bamnauli opens from 220 kV side

21:44:15:172	ICT-4 at Bamnauli opens from both sides
21:44:38:515	220 kV Bamnauli-Najafgarh D/C trips from Bamnauli end (reportedly on distance protection as per DTL)

Thus at Bamnauli 220 kV, the only elements connected at 220 kV at this stage are the 400/220 kV, 315 MVA ICTs 1 and 2, 220 kV Bamnauli-Mehrauli D/C line (charged from Bamnauli end only), 220 kV Bamnauli-Dwarka D/C (charged from Bamnauli end only) and 220 kV Bamnauli-Naraina D/C line. Any uncleared fault on the 220 kV sections would have resulted in 400/220 kV ICTs 1 and 2 clearing the fault on directional overcurrent (as 1600-1800 MVar from Bawana would have flown through these two ICTs of 630 MVA only).

Hence an uncleared fault in the 220 kV network for nearly two minutes is ruled out. So that leaves only the 400 kV Bamnauli-Ballabgarh D/C section as the likely candidates for an uncleared fault from Bamnauli end.

The 400 kV Bamnauli-Ballabgarh D/C line has micromho distance protection at Bamnauli end for both Main-I (permissive underreach) and Main-II (blocking). These relays do not have any facility for recording. The DR outputs from Bamnauli submitted by DTL are not meaningful as the date and time is not in order. DTL has however installed a numerical relay REL 511 for the purpose of disturbance recording and not for protection on both the Ballabgarh lines at Bamnauli. Two outputs from these relays installed on Ballabgarh-2 feeder at Bamnauli triggered during this period of sustained fault are enclosed at Exhibit-4/VIII. The timings indicated in these outputs are not synchronized with GPS. It is seen from these outputs that there is a current of the order of 6 kA rms on the R-phase and voltage in R-phase is depressed. This indicates that the fault is being fed on this circuit. The following questions arise out of this fact. (Please refer to the Delhi ring main sketch at **Figure 7** above for ease of understanding)

i. Which breaker at Bamnauli got closed, when it is seen that at 4.2.1 above, the only breaker in service for this feeder has opened as per the Sequence of Events (SOE) recorded through SCADA and why? What was the nature of the fault?
ii. Even if the above breaker had closed, why wasn't the fault cleared through the distance relay at Bamnauli end?
iii. If the distance relays had operated correctly but the breaker failed to clear the fault, LBB protection of this breaker should have operated at Bamnauli and cleared the entire bus. Why didn't this happen?

iv. Even if the Bamnauli end could not clear the fault on 400 kV Ballabgarh-2, assuming that distance relay here could not sense the fault, why didn't the fault get cleared from Bawana end on distance protection at least in Zone-2 or Zone-3?

v. Even if the distance protection at Bawana could not sense the fault, shouldn't the directional earth fault relay at Bawana sense this fault much earlier than the Bahadurgarh, Hissar and Abdullapur ends? By the same logic, the 400 kV Mandaula-Bawana D/C lines should have sensed the fault through directional earth fault much earlier than these far-off locations.

vi. How did the fault finally get cleared?

The subsequent sections try to answer each of these questions based on the inputs available.

4.3.1 What was the nature of the fault? Which breaker at Bamnauli closed leading to this fault being fed?

DTL have reported that the initial fault on the 400 kV Bamnauli-Ballabgarh section at 21:44 hours was on account of earth wire snapping between tower 270-277 (35 kms. from Bamnauli end). As per the Numerical Relay outputs from Ballabgarh for both the circuits (Exhibits 4/I and 4/II), the fault has been cleared successfully from both the ends through a three phase trip. (No CVT voltage appearing after the fault current disappears indicates that Bamnauli end has also cleared). There is no evidence of any LBB action at this instance at Bamnauli implying that there is no stuck breaker condition at Bamnauli. Hence the fault has been cleared through operation of the line breakers only on primary protection at Bamnauli end. (at Ballabgarh end, LBB action had taken place on account of one stuck breaker for Bamnauli-2 feeder connecting to Main Bus-1).

The 400 kV Ballabgarh-2 feeder is connected to the 400 kV bus at Bamnauli as under:

- Breaker no. 352 connecting to 400 kV Bus-1 (1652 as per NRLDC SCADA)
- Breaker no. 452 connecting to 400 kV Bus-2 (1752 as per NRLDC SCADA).

It is observed from the SoE recorded at NRLDC that breaker no. 452 (1752 as per NRLDC SCADA) had been put off since 0956 hours on the morning of 2nd January 2010. Therefore, at the time of the incident only breaker no. 352 (1652 as per NRLDC SCADA) was in service. This breaker tripped at 21:44:09:591 as per the SoE and has not auto-reclosed.

This and the sustained fault thereafter on 400 kV Bamnauli-Ballabgarh-2 being fed from Bamnauli could be possible if R-pole of the breaker No. 452 had auto-reclosed on to the fault. If the bus isolators were in closed condition, the fault would start getting fed from 400 kV Bamnauli. Since there is no proper Event Logger at 400 kV Bamnauli substation, this aspect cannot be additionally corroborated.

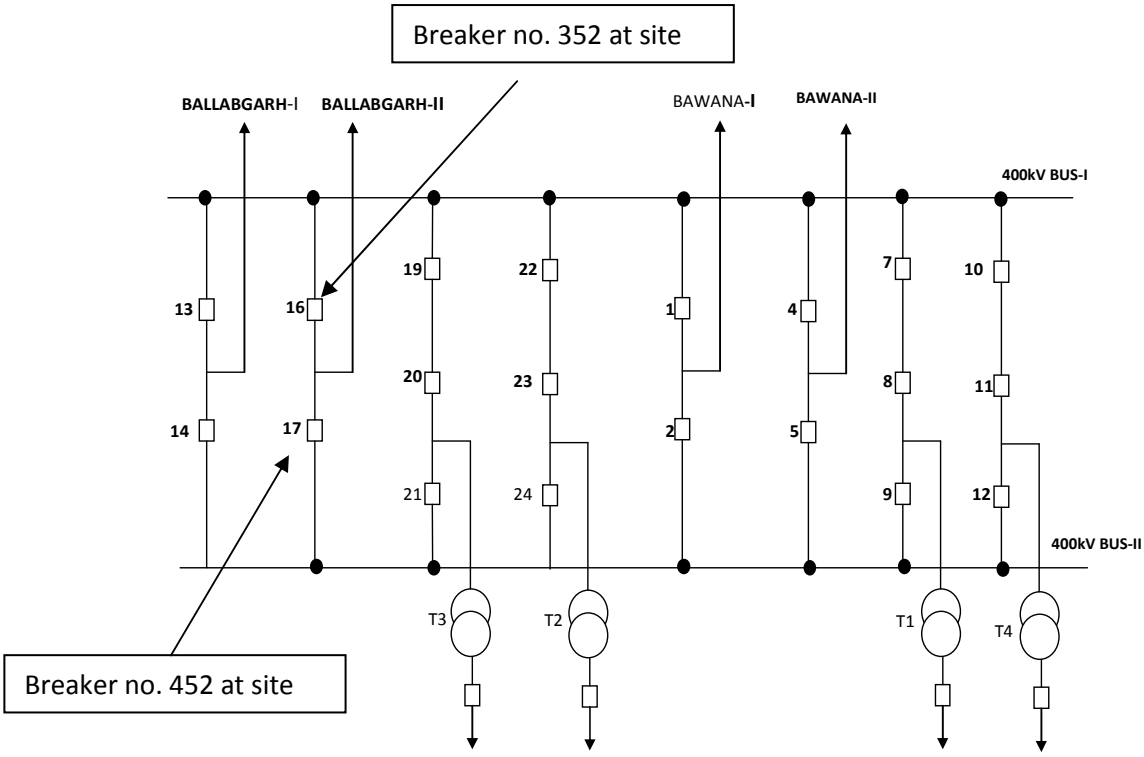

Figure 10: Single Line Diagram (SLD) of 400 kV Bamnauli substation as per NRLDC SCADA

In the breaker and a half switching scheme or the double bus double breaker scheme such as above, in case any breaker has to be kept off due to any problem, the auto-reclosure feature should be kept in 'non-auto' mode to avoid any reclosure. This has to be toggled manually. Further, the isolators on both sides of a breaker are kept open in case the breaker has to be attended to. However in case of any oversight such as not keeping the switch in 'non-auto' mode and keeping the isolators ON, there could be a mishap such as above.

Such a mishap had occurred at 400/220 kV Biharshariff(PG) substation in Eastern region on 6th January 2007 at 1610 hours when a line fault was fed for close to three (3) minutes leading to 1700 MW generation loss at Farakka, Kahalgaon and Tenughat TPS.

4.3.2 Even if the above breaker had closed, why wasn't the fault cleared through the distance relay at Bamnauli end and/or LBB protection in case of stuck breaker?

This aspect merits a close investigation by DTL. The NRLDC SoE output shows that 'Main-1 trip' and 'Main-2 trip' indication at Bamnauli for 400 kV Ballabgarh-2 circuit is coming continuously at periodic intervals right up to 21:45:48:552. However the fault has not been cleared either through opening of the 452 breaker or through LBB action isolating 400 kV Bus-2 at Bamnauli. This merits detailed investigation by DTL and testing of the LBB and bus bar protection scheme.

4.3.3 Why didn't the fault get cleared from Bawana end on distance protection at least in Zone-2 or Zone-3?

Since the fault has occurred 35 kms. from Bamnauli towards Ballabgarh and the nature of the fault is an earth wire snapping and hanging, there is a possibility that the fault is an arcing high impedance fault and beyond the reach of the distance protection at Bawana.

4.3.4 Even if the distance protection at Bawana could not sense the fault, shouldn't the directional earth fault relay at Bawana sensed this fault much earlier rather than a trip at the ends remote to Bawana?

Yes, it should have happened but it is reported that the 400 kV Mandaula-Bawana-Bamnauli-Ballabgarh section does not have a directional earth fault relay at Mandaula, Bawana and Bamnauli ends. This has been recommended for 400 kV lines by the CBIP Technical Publication no. 274 and also by the Protection sub-committee of NRPC. This explains why neither 400 kV Mandaula-Bawana D/C did not trip at Mandaula end nor 400 kV Bawana-Bamnauli D/C did not trip at Bawana end.

4.3.5 How did the fault finally get cleared?

The high MVAR flow on 400 kV Bawana-Bamnauli D/C line has disappeared around 21:46 hours indicating that the fault has been cleared. However there was no evidence of any switching operation on 400 kV Mandaula-Bawana-Bamnauli section which was the only infeed to the fault. So how did the fault finally get cleared. General Manager (O & M), DTL's report dated 18th January 2010 states *'On patrolling, Bamnauli-Ballabgarh lines, it has been observed that the earth wire between Tower No. 270 (35 km. from Bamnauli end), Tower no. 277 (37 km. from Bamnauli) were found burnt and broken. Disc insulators of three towers i.e. Tower No. 272 & 273, (Disc insulators of Ckt II) & Tower No. 276 (Disc insulator of Ckt.I & Ckt.II) were found cracked.'*

Thus the fault appears to have been cleared by burning of the snapped earth wire and not due to any switching operation**.** This is also evident from the fact that 400 kV Bamnauli-Ballabgarh-2 was restored at 2309 hours of the same night and held okay. However, this also raises another concern that without ascertaining the nature of fault (which must have been known only the next day after patrolling), the system was restored and could have had a bearing on public safety.

It is not clear as to when the faulty breaker 452 was isolated. DTL's report dated 18th January 2010 has not thrown any light on this aspect.

4.4. Sequence of events after clearance of the fault on 400 kV Bamnauli-Ballabgarh Ckt 2: (Timings as per NRLDC SoE unless otherwise stated)

21:48:55:185	400 kV Hissar-Bawana closed from Hissar end providing some relief to the congested Dadri-Panipat & Dadri-Malerkotla sections.
21:49:20:414	400 kV Hissar-Bawana trips, autorecloses and again trips on line fault from both ends (it tripped on B-phase to ground fault, B-phase jumper was found damaged at loc. No. 35). Numerical Relay and EL output enclosed at Exhibit-4/IX.
21:51:42:929	220 kV Ballabgarh-Charkhi Dadri trips from Ballabgarh end on distance protection (all three phases). The line went under breakdown. No DR or Numerical relay output has been forwarded by BBMB for this tripping. The Historical Data of this line flow becomes suspect before the tripping. Special Energy Meter (SEM) data suggests that the flow would have been of the order of 350 MW.
21:52:08:684	400 kV Abdullapur-Bawana-1 closed from Abdullapur end providing some relief to the congested Dadri-Panipat & Dadri-Malerkotla sections.
21:53:00:331	Dehar-1 hydro unit taken out as part of generation schedule.
21:53:39:095	220 kV Samaypur-Dadri trips from Samaypur end on distance protection. (all three phases). No DR or Numerical relay output has been forwarded by BBMB for this tripping. The Historical Data of this line flow becomes suspect before the tripping. Special Energy Meter (SEM) data suggests that the flow would have been of the order of 350 MW.
21:53:58:582	400 kV Dadri-Panipat-1 trips from both ends on distance protection, R-phase to ground fault, Zone-1 at Dadri NTPC end. Numerical Relay output enclosed at Exhibit-4/X. The reason for this fault needs to be established. Failure of this line to autoreclose also needs detailed investigation. The fault would have been

transient in nature considering the fact that this line was restored at 2325 hours, the same day. This line might have been carrying 1200-1300 amps for nearly ten (10) minutes, which although less than the thermal limit might have resulted in clearance related issues, which does not crop up under normal loading conditions. The reason for tripping requires further examination.

21:54:00:649 400 kV Abdullapur-Bawana-1 tripped from Bawana end on Y-phase to ground fault. It tripped at Abdullapur end much later at 21:54:04:826 on pole discrepancy. EL and Numerical relay output at Abdullapur enclosed at Exhibit-4/XI.

21:54:00:765 400 kV Dadri-Malerkotla line tripped at Malerkotla end on distance protection. EL and Numerical relay output for this trip enclosed at Exhibit-4/XII. This output shows extremely low voltages 320 kV and 3.2 kA current in each phase.

With the above tripping, the Punjab/Haryana/HP/J & K system separated from rest of the grid (barring a small portion of HP system which remained connected with the Uttarakhand power system radially and small portion of Faridabad and Gurgaon areas connected to Ballabgarh which survived) and collapsed within a few seconds on account of low frequency and failure of the defense mechanism which has been explained in Section 5. The axis of separation is enclosed at Exhibit-4/XIII.

In rest of the NEW grid, the frequency shot up from 50 Hz to 51 Hz and a few 400 kV line tripped on reported over voltage (O/V) protection as given below. Fortunately the system survived. Since no generating unit was in operation at RAPS-C nuclear power station, no unit tripping occurred at this station. However, primary response through the governing system would definitely have helped the situation further, else secondary collapses in the unaffected system on account of high frequency and high voltage cannot be ruled out.

Transmission line	Time of tripping	Time of restoration
400 kV Agra-Auraiya-I	21:54	22:35
400 kV Agra-Auraiya-I	21:54	22:21
400 kV Balia-Patna-I	21:55	22:22
400 kV Gorakhpur-Gorakhpur-I	21:55	22:00
400 kV Kankroli-RAPP-C-I	21:55	22:00
400 kV Kankroli-RAPP-C-II	21:55	22:00
400 kV Kota-RAPP-C	21:55	22:00
400 kV Lucknow-Bareilly-II	21:55	22:47
400 kV Gorakhpur-Muzaffarpur-I	21:55	03-Jan-2010

The angular separation between the North and West 400 kV bus at Vindhyachal during the entire day is shown in **Figure 11** below which shows a sharp spike in the angular difference at the two instances of separation. Positive sign of angle indicates that North bus is leading while negative sign shows that West bus is leading. Visualization of angular separation between buses would also be made possible in Northern region through the synchrophasor technology. As part of adopting this technology, NRLDC is already going ahead with a pilot project involving four (4) Phasor Measurement Units (PMUs) being installed at Vindhyachal HVDC back to back station, Kanpur, HVDC Dadri and 400 kV Moga substations. This would provide a parallel means of real time monitoring independent of the Energy Management System (EMS).

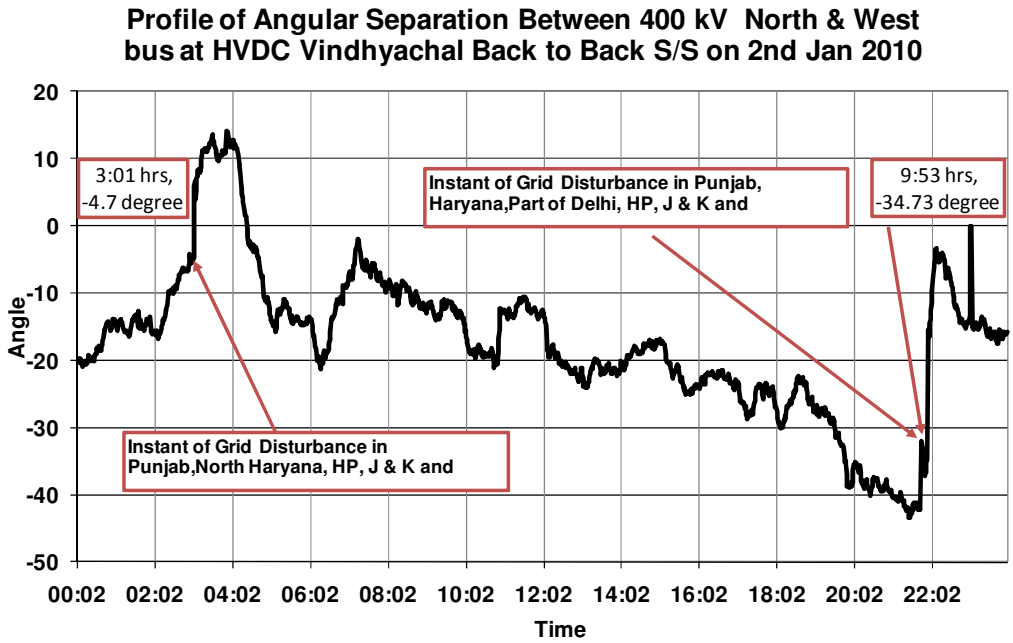

Figure 11: Angular separation between North & West bus at Vindhyachal HVDC back to back

In Delhi system, a small portion of east Delhi and generating units at Pragati had got islanded due to tripping of 220 kV Wazirabad-Geeta Colony D/C line. The Pragati units tripped. This incident was not related to the main incident above although the timing was similar. Likewise, supply disruption at seventeen (17) 220 kV substations occurred some of which were not related to the main incident above. At 2157 hours, the operator at 400/220 kV Bawana substation is reported to have opened the 400 kV Mandaula D/C lines on noticing arcing in the switchyard. This led to supply disruption in all the 220 kV substations fed from 400 kV Bawana and Bamnauli sub stations.

x----x-----x

SECTION 5

Failure of defense mechanism in the grid

5.1 Defense mechanism available in the Northern Regional (NR) grid.

In order to protect the interconnected power system against the system related contingencies like low frequency, sudden dip in frequency and voltage collapse, Regional Power Committee (RPCs) throughout the Indian power system have recommended for installation of under frequency (UFR), rate of change of frequency(df/dt) and under voltage relay based load shedding (UVLS) schemes in the northern region.

Settings recommended for Northern Region Power System by Northern Region Power Committee (NRPC) are described below.

5.1.1 UFR setting in Northern Region as recommended by NRPC

Three stages of under frequency relay (at 48.8 Hz, 48.6 Hz and 48.2 Hz) based load shedding have been recommended. State wise load relief envisaged from UFR relays based load shedding scheme in northern region are given at table below.

Table 7: State wise planned Load Relief from UFR in NR

		Load relief in MW			
STATES	**Peak MW Met 2006-07**	**48.8 Hz**	**48.6 Hz**	**48.2 Hz**	**Total**
Punjab	6558	180	220	250	650
Haryana	4201	110	140	150	400
Rajasthan	4946	120	150	225	495
Delhi	3736	110	140	150	400
UP	7531	190	240	275	705
Uttarakhand	991	30	30	50	110
HP	873	20	20	75	115
J & K	1309	40	50	75	165
Chandigarh	247	0	10	0	10
TOTAL	30392	800	1000	1250	3050

5.1.2 df/dt setting in Northern Region as recommended by NRPC

Protection against sudden dip in frequency has also been recommended in three stages. Stage-I of df/dt scheme is to protect the combined 'N-E-W' grid from loss of generation of a large power station and stage-II of the df/dt is to protect the split grid from loss of generation of a large power station in NR, WR, ER. The recommended setting for these two stages are as summarized at table below.

In addition to this, stage-III (or stage –IV) of df/dt have also been recommended to protect the individual regional grid / state grid from loss of generation in the event of isolation.

Table 8: Recommended df/dt relay setting in NEW grid

Setting of df/dt relay	NR	WR	ER
STAGE - I	2000 MW at 0.1 Hz/Sec. at 49.9Hz.	2000 MW at 0.1 Hz/Sec. at 49.9Hz	800MW (600MW ER+ 200MW SR) at 0.125 Hz/Sec. at 49.9Hz.
STAGE - 2	2000 MW at 0.2 Hz/Sec. at 49.9Hz.	2000 MW at 0.2 Hz/Sec. at 49.9Hz.	Nil

Table 9: State wise planned Load Relief from df/dt relays in NR

		Load relief in MW			
	Peak MW Met 2006-07	**Stage-I 49.9Hz& 0.1Hz/sec**	**Stage-II 49.9Hz& 0.2Hz/sec**	**Stage-III 49.9Hz& 0.3Hz/sec**	**Total**
Punjab	6558	430	490	490	1410
Haryana	4201	280	310	310	900
Rajasthan	4946	330	370	370	1070
Delhi	3736	250	280	280	810
UP	7531	500	280	280	1060
Uttarakhand	991	70	70	70	210
HP	873	50	70	70	190
J & K	1309	90	90	90	270
Chandigarh	247	0	50	50	100
TOTAL	30392	2000	2010	2010	6020

5.1.3 Under Voltage Load Shedding (UVLS) in NR

After the synchronization of northern region power system with central grid in august 2006, during its 3rd meeting in November 2006, NRPC have recommended for installation of Under Voltage relay based load shedding. The state utilities have been advised to adopt a setting in the range of 180-190 kV voltage with 5-10 seconds delay.

5.2 Performance of the defense mechanism in above disturbance

During the instance of grid disturbance at 03.01 hrs. due to failure of auxiliary supply at microwave communication system, the telemetry from a large portion of the affected system was not available and therefore the real time data from this portion

is not available. For the disturbance at 21:54 hrs., the frequency data has been derived from the Historical Tabular Trend of Ropar TPS unit 3-6 enclosed at Exhibit-5/I.

However, as the relief from UFR and df/dt relays is generally envisaged from the load at lower level voltages (say 132, 66 and 33 KV) and the telemetry for most of such locations is also not available, the computation of the load shedding in respect of UFR and df/dt relays is based on the information supplied by the constituent states. Hence on the information received from affected constituent states, the performance of UFR and df/dt relays are summarized as below. During the two instances of grid disturbance on 2nd Jan 2010, the details shown below pertain to the states of Punjab, Haryana and HP. There has been no report of load shedding through UFR and df/dt relay based load shedding from Jammu & Kashmir and Chandigarh.

5.2.1 Performance of UFR and df/dt scheme at 03.01 hrs of 2nd Jan 2010

In the incident of 0301 hours of 2nd January 2010, the details of load relief are given in the Table below.

Table 10: Performance of UFR and df/dt load shedding scheme at 03:01 hrs

02-Jan-2010 03:01 hrs						
	UFR based load shedding			df/dt based load shedding		
State	Planned (MW)	Actual (MW)	%age	Planned (MW)	Actual (MW)	**%age**
Punjab	650	281	43.22	1410	122	8.67
Haryana*	200	30	15.21	450	0	0.00
HP	115	96	83.48	190	143	75.26
Jammu & Kashmir	165	-	-	270	-	-
Chandigarh	10	-	-	100	-	-
Total	1140	407	35.73	2420	265	10.96
Note : Planned MW includes all the three stages.						
* Only North Haryana was affected during the incident therefore only 50 % of the total load shedding Planned has been taken here.						

The breakup of load relief obtained through UFR and df/dt relays are enclosed at Annexe-5/I.

5.2.2 Performance of UFR and df/dt scheme at 21.54 hrs of 2nd Jan 2010

One second interval SCADA data of the Ropar TPS indicates (pl refer Ropar Historical Tabular Trend data at Annexe 5-II) that frequency touched the minimum level of 45.5 Hz at the instance of blackout at 21.54 hrs of 2nd Jan 2010 and the rate of change of frequency (df/dt) was of the order of 1.8 Hz/sec. The frequency and df/dt plots for the 2154 hours incident are shown in **Figure 12** and the details of load relief are given in Table below.

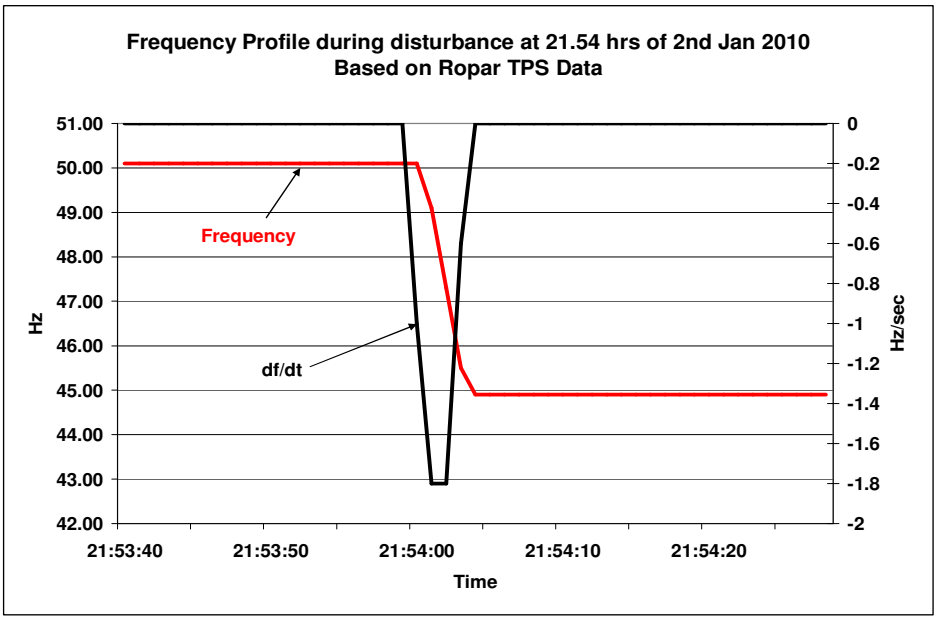

Figure-12: Frequency and rate of change of frequency plot

Table 11: Performance of UFR and df/dt based load shedding scheme at 19:54hrs

02-Jan-2010 21:54 hrs						
	UFR based load shedding			df/dt based load shedding		
State	Planned (MW)	Actual (MW)	%age	Planned (MW)	Actual (MW)	%age
Punjab	650	237	36.50	1410	414	29.37
Haryana	400	57	14.33	900	0	0.00
HP	115	91	79.13	190	82	43.16
Jammu & Kashmir	165	-	-	270	-	-
Chandigarh	10	-	-	100	-	-
Total	1340	386	28.77	2870	496	17.29
Note: Planned MW includes all the three stages.						

The breakup of load relief obtained through UFR and df/dt are enclosed at Annexe-5/III.

5.3 Performance of UVLS

During the incident of 0301 hours in the early morning of 2nd Jan 2010, system voltages dipped to critically low level due to very high loading of transmission system in the depleted network. There was heavy inrush of power flow on the 400 kV Dadri-Malerkotla and 220 kV Hisar-Sangrur D/C line due to outage parallel circuits interlinking the affected area with main grid. The reactive power flow/loss on 400 kV Dadri-Malerkotla (Figure 5 Section-3 of this report) and 220 kV Hisar Sangrur was of the order of 1000 MVAR and 360 MVAR respectively.

Plot of voltage profile at Dadri (Th), Malerkotla, Srinagar and Kishenpur during the grid disturbance at 03.01 hrs are shown in Figure 13 and 14. It has been observed that dip in voltage at Dadri (Th) was of the order of 30 kV and at Malerkotla was of the order of 67 kV. The voltages at Kishenpur and Srinagar were dipped by 30 kV and at Hisar-Sangrur dipped by 25 to 30 kV. Such a low voltage profile persisted for about 5 minutes.

Very low voltages were also observed in the national capital region also during the instance of grid disturbance at 21.54 hrs for a fault on 400 kV Ballabgarh-Bamnauli line and subsequently during heavy inrush of power through the main tie lines between affected area and the rest of the grid. However no instance of under voltage loads shedding has been reported in the affected region during either of the incidents.

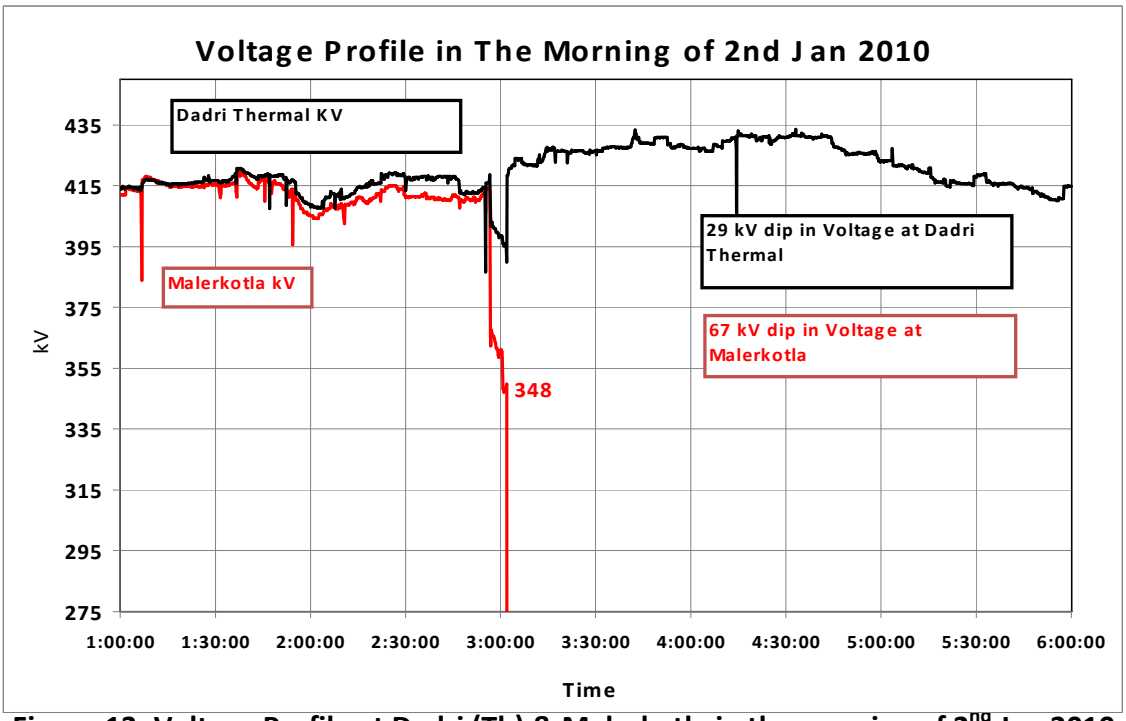

Figure-13: Voltage Profile at Dadri (Th) & Malerkotla in the morning of 2nd Jan 2010

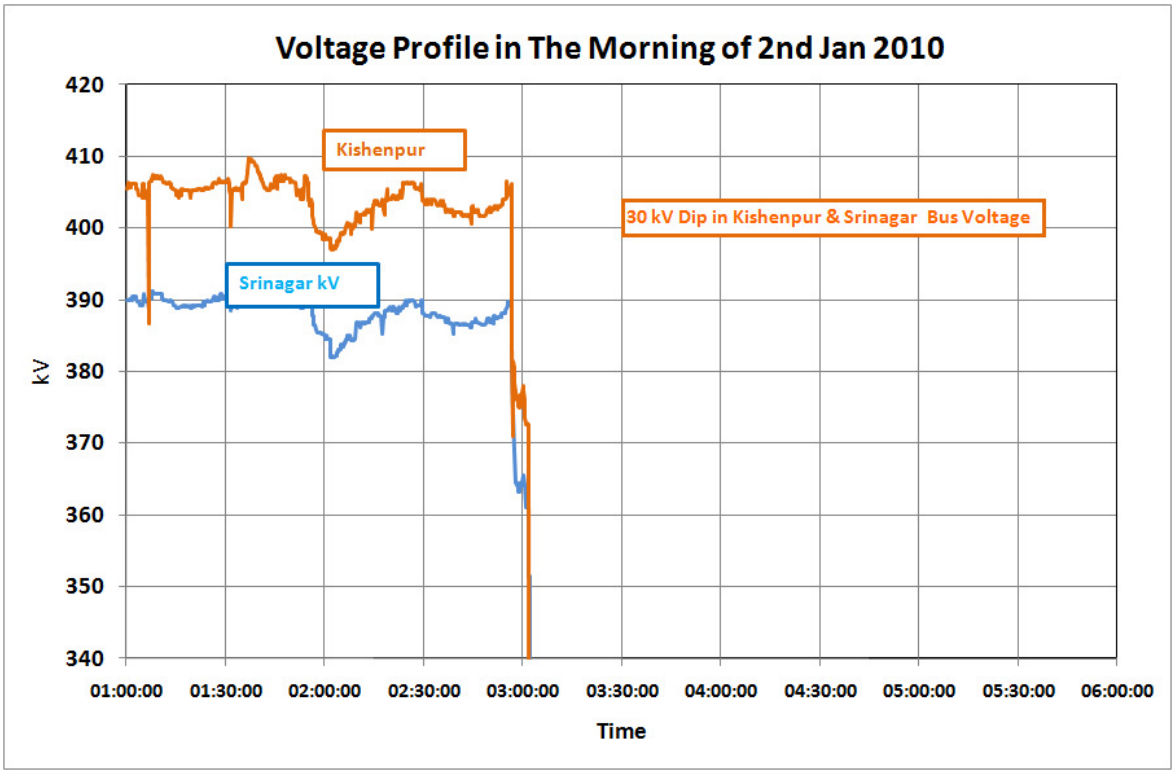

Figure-14: Voltage Profile at Kishenpur and Srinagar in the morning of 2nd Jan 2010

SECTION 6

Restoration of the system following the two disturbances

6.0 General:

The restoration of the system was started immediately following the collapse of the part of Northern Regional power system. The main objectives which were kept in consideration at the time of restoration were;

- Priority of supply to Railways
- Start up supply to thermal stations
- Faster restoration

6.1 Restoration after event at 0301 hrs:

The system restoration after this event was impacted due to non availability of number of 400 kV and 220 kV trunk lines in various corridors on account of foggy weather conditions. Therefore, the 'Top down' approach of restoration from resources already available in larger system was proving to be difficult and accordingly 'Bottom UP' approach of starting many island was also adopted. Though, this type of restoration philosophy is accompanied with its own share of problems as it requires considerable efforts during synchronisation of these sub-systems or accidentally mixing of supplies of these sub-systems, but under the given situations it was effectively employed for faster restoration.

6.1.1 Challenges experienced in reaching the hydro stations during restoration

During the time of restoration the following challenging conditions were experienced in reaching to main hydro stations :

- Dehar HPS on account of outage of 400 kV Panipat-Dehar & Bhiwani-Dehar
- Chamera-I HPS and further power stations in J & K on account of outage of the 400 kV Hissar-Fatehabad-Moga & 400 kV Hissar-Khedar-Moga sections.
- Jhakri HPS on account of 400 kV Bawana-Abdullapur-Jhakri section and 400 kV Hissar-Patiala-Nalagarh-Jhakri sections.

6.1.2 Bottlenecks experienced in extending start up to thermal stations

The bottlenecks were also experienced in extending start up supply to the thermal power stations as paths were not available. For instance outage of Govindgarh

substation in Punjab, posed a severe constraint in extending start up power through the 220 kV Ganguwal-Govindgarh route. Similarly, outage of 220 kV Rajpura-Mohali section posed a constraint in extending start up to Ropar TPS on Patiala(PG)-Rajpura-Mohali-Ropar section.

6.1.3 Issues during Black start of hydro units

The black starting of hydro units also has its initial share of issues as this requires calling of additional maintenance crew at these stations. The continuous follow-ups were made with these stations and finally following units were black started and provided valuable support in reviving the system as well as in feeding some important load:

- Jhakri 0458 hours
- Salal 0542 hours
- Chamera-I 0507 hours
- Uri 0740 hours

6.1.4 Issues in BBMB system

In BBMB system, although the supply was quickly extended to Bhakra from Hissar on 220 kV Hissar-Sangrur-Jamalpur-Bhakra route by 0340 hours and unit at Bhakra synchronized, this system tripped several times (0404, 0429, 0509 and 0608 hours). Ultimately the unit at Bhakra(Left) operated in isolated mode and could be synchronized with the main system only by 0841 hours on 400 kV Bhiwani-Dehar-220 kV Ganguwal link.

6.1.5 Railway traction supply on the Delhi-Ambala and Ambala-Amritsar routes were affected on account of the disturbance. The supply to railways was also affected to Delhi-Hawarh section from Dhankaur feeding point despite the Dadri (Gas) station being live, due to tripping of Railways own 220 kV interconnector between Dadri (Gas) and Dhankaur. The supply to this section was extended from 220 kV Auraiya section by the Railways itself.

6.2 Restoration Sequence of the incidence at 0301 hrs.:

The broad restoration sequence after the above incident is as follows:

Time (hh:mm)	Restored Element/Section/System
03:05:51	220 kV Bahadugarh-Nunamajra I
03:11	220 kV Samaypur-Charkhi Dadri
03:24	220 kV Hissar-Jind-II
03:21:39	220 kV Sangrur-Hissar 2
03:27:34	220 kV Sangrur-Jamalpur 2

Time (hh:mm)	Restored Element/Section/System
03:28:39	220 kV Hissar-Bhiwani 2
03:32:00	220 kV Narwana-Hissar
03:35	220 kV Hissar-Fatehabad
03:39:57	220 kv Jamalpur-Bhakra 1
	However system tripped. The same restoration of extending power from Sangrur to Jamalpur to Bhakra was done at 0404, 0429, 0509 and 0608 hrs also but system tripped.
03:53:24	400/220 kV ICT at Bhiwani
04:58	Unit # 3 at NJHEP black started
05:07	Unit # 3 at Chamera 1 black started
05:10	400 kV NJ HEP-Abdullapur 2 charged abd supply extended to Haryana system and Railways by charging the ICT at Abdullapur. Subsequently start up supply to Yamunanagar extended.
05:17	400 kV Chamera I – Jallandhar 2 charged and Supply extended to Punjab system by charging ICT at Jallandhar
05:20:33	220 kV Kartarpur-Kotlajanga restored
05:42	Unit # 3 at Salal HEP black started
05:47	400 kV Abdullapur-Bawana 2 restored by synchronizing at Bawana system. This synchronized Jhakri sub-system with the rest of the grid.
06:04	220 kV Salal-Jammu 1charged
06:07	400 kV NJ HEP-Nalagarh 2 normalised
06:09	400/220 kV ICT at Nalagarh normalized and supply extended to Chandigarh
06:12:21	220 kV Sangrur-Barnala restored
06:16:32	220 kV Barnala-Lehra Mohabbat restored and startup supply to Lehra Mohabbat extended. Subsequently start up supply to Bhatinda was also extended.
06:17	400 kV Nalagarh-Patiala restored.
06:22	400/220 kV ICTs at Patiala normalized and supply extended to Punjab system.
06:37	400 kV Ludhiana-Malerkotla restored
06:40	Chamera I island collapsed
06:59	HP system normalized with supply form Uttrakhand system and supply extended upto Bairasiul.
07:04	400 kV Patiala-Malerkotla normalized.
07:12:41	400 kV Bhiwani-Dehar normalized.

Time (hh:mm)	Restored Element/Section/System
07:13	400 kV Nalagarh-Kaithal restored
07:22:55	132 kV Kotla-Ganguwal normalized and subsequently supply extended to Ropar on 132 kV Kotla-Ropar feeder.
07:22:55	400/220 kV ICT at Dehar normalized.
07:34:04	220 kV Ablowal-Govindgarh normalized.
07:35	Supply extended to RSD on 220 kV Jessore-RSD
07:39	400 kV Ludhiana-Jallandhar normalized.
07:40	Unit # 1 at Uri started in islanded mode to supply power to valley area.
07:52	132 kV Kotla-Ropar 1 normalised and startup supply to Ropar.
08:00	400/220 kV Jallandhar ICTs normalized and supply extended to Punjab system for normalization.
08:21	400 kV Abdullapur-Bawana 1 normalized.
08:22	220 kV Jallandhar-Hamirpur 2 normalised and HP system connected.
08:36	220 kV Jallandhar-Dasua 1 normalised.
08:45	220 kV Jallandhar-Dasua 2 normalised.
08:39	Salal island collapsed and again started at 0845 hrs.
08:41	220 kV Dehar-Ganguwal 1 normalised. This completed connecting the Bhakra system.
08:52	400 kV Chamera1 –Chamera2 normalised and unit at Chamera 2 taken in service to control voltages.
09:05	400 kV Chamera2 –Kishenpur normalized.
09:15	400 kV Amritsar-Jallandhar normaliised.
09:22:34	220 kV Hissar-Khetri normalized.
09:37:38	220 kV Jagadari-Kurukshetra normalized.
09:39	400 kV Jallandhar-Moga 1 normalised.
09:42:25	220 kV Jallandhar-Pong normalized.
09:46:55	220 kV Ganguwal-Mohali normalized.
09:55	Supply extended to Salal on 220 kV Kishenpur-Salal 1 for normalization of Salal HEP.
09:59:40	220 kV Panipat-Kurukshetra normalized.
10:09:15	220 kV Dehar-Kangoo normalized.
10:09:15	400 kV Dehar-Panipat normalized.
10:31	400 kV Moga-Jallandhar 2 normalised.
10:32	220 kV Kishenpur-Sarna section normalized.
10:57	400 kV Moga-Kishenpur 1 normalised.
11:30	400 kV Wagoora-Kishenpur 1 normalised.

Time (hh:mm)	Restored Element/Section/System
12:51	400 kV Wagoora-Uri 2 normalised.
12:56	Uri unit #2 synchronised with the grid.

6.3 Restoration after event at 2154 hrs:

Restoration after this event started with 'Top down' approach as the transmission system paths for reaching to the different thermal and hydro station were not under breakdown as were after the morning incident. Still in order to extend supply to J&K areas (higher restoration time anticipated as being far away from the healthy part of the system), the Uri and Salal HEPs were black started for radially feeding limited supply to Valley and Jammu area respectively. The broad philosophy of restoration is as given below:

6.3.1 400 KV Dadri-Malerkotla circuit was restored and supply was extended to Punjab system with start up to Lehra Mohabbat, Bhatinda, to 400 kV Patiala and to Punjab system and railways;

6.3.2 From Patiala the supply was extended to 400 kV Nalagarh & supplied to Chandigarh and Jhakri. Later Jhakri supply extended upto Abdullapur and Haryana/HP system with startup to Yamunanagar also. Abdullapur-Bawana was also restored.

6.3.3 From Malerkotla supply was extended to 400 kV Ludhiana - 400 kV Jallandhar. Supply extended to Kishenpur through 400 kV Jallandhar-Chamera-Chemara2-Kishenpur section.

6.3.4 Punjab system normalised from 400/220 kV interconnection at these stations.

6.3.5 Supply extended to 400 kV Moga/Amritsar also. Simultaneously supply to Moga was tried through HIssar-Fatehabad-Moga and 400 kV Hissar-Khedar-Moga section as well as through Punjab's 220 kV network also.

6.3.6 From Kishenpur supply extended to Salal and Jammu region of J&K restored.

6.3.7 From Kishenpur supply extended to 220 kV Pampore-Wagoora-400 kV Uri and Valley system of J&K restored.

(The Salal and Uri were also black started with radial load of Jammu and Ziankote respectively)

6.3.8 Supply extended upto Bhakra on from Charkhi Dadri- Panipat- Dhulkote-Ganguwal - Bhakhra and supply to Railways & Panipat (T) extended from Panipat.

Afterwards supply extended from Bhakra to Punjab system.

6.3.9 400 kV Dadri-Panipat normalised and extended up to Dehar. This supply clubbed with other restoration supply at Panipat through 400/220 kV ICT and at Dehar through 400/220 kV ICT and 220 kV Dehar-Ganguwal.

6.3.10 400 kV Mandola-Bawana, 400 kV Ballabhgarh-Bamanuli-Bawana and then Bawana to Hissar, Bawana to Abdullapur, Bawana-Bahadugarh-Bhiwani normalised to strengthen the revived system.

6.3.11 220 kV Charkhi Dadri –Bhiwani- Hissar-Hissar-IA- Hissar PG and Hissar-Sangrur section also restored with strengthening at Dadri through 220 kV Khetri- Dadri, at Hissar through 220 kV Khetri-Hissar and at Hissar (PG) through 400/220 kV ICT and 400 kV Hissar-Patiala.

6.4 Restoration Sequence of the incident at 21:54 hrs

The broad restoration sequence after the above incident is as follows:

Time (hh:mm)	Restored Element/Section/System
22:04:09	Supply extended to Malerkotla on 400 kV Dadri-Malerkotla
22:19:49	400 kV Dadri-Panipat-II restored
22:21:57	Supply to Charkhi Dadri on 220 kV Samaypur-Charkhi Dadri
22:23:38/47	400/220 kv ICTs at Malerkotla taken in service.
22:26:03	Supply to 220 kV Bhiwani on 220 kV Ch. Dadri-Bhiwani
22:30:56	Supply to 220 kV Panipat through 220 kV Ch Dadri-Panipat
22:33:40	Supply to Dhulkote on 220 kV Panipat-Dhulkote-1
22:33:47	Supply to Barnala on 220 kV Barnala-Malerkotla
22:36:22	Supply extended to Chandigarh on 660 kV chandigarh feeders from Dhulkote
22:37:44	Main Bus-1 at 400 kV Ballabhgarh restored.
22:39:04	400/220 kV ICT-2 at Panipat taken in service
22:41:04	Supply extended to Ganguwal on 220 kV Dhulkote-Ganguwal-1
22:43:15/29	400 kV Malerkotla-Patiala and 400 kV Malerkotla-Ludhiana charged.
22:45:46	220 kV Panipat-Panipat (T) #2 closed and supply to Panipat (T)
22:45:55	Supply to Lehra Mohabbat on 220 kV Barnala-Lehra Mohabat and then to Bhatinda
22:52:27	400 kV Panipat-Dehar restored
22:55:34	220 kV Khetri-Hissar charged
22:55:56/56:06	220 kV Khetri-Dadri I & II charged
22:57:02	400/220 kV ICT # 2 at Patiala restored
22:58:17	220 kV Patiala-Ablowal restored.
22:59:59	Supply extended to Bhakra on 220 kV Ganguwal-Bhakra –IV

Time (hh:mm)	Restored Element/Section/System
23:01:22	400/220 kV ICT at Dehar restored
23:02:13	400 kV Mandola-Bawana-1 restored.
23:03:54	GT # 10 at Bhakra taken in service
23:03:58	400 kV Ballabhgarh-Bamnauli -2 restored.
23:07:41	Supply extended to Jamalpur on 220 kV Bhakra-Jamalpur-1
23:07:41	Supply to Nalagarh over 400 kV Patiala-Nalagarh
23:11:41	Supply given to Chandigarh on 220 kV Nalagarh-Chandigarh -2
23:15:49	400 kV Nalagarh-Jhakri 2 line taken in service
23:20:11	Dehar unit # 3 synchronised
23:20:12	132 kV Kotla-Ropar restored
23:24:45	220 kV Hissar-Sangrur –I restored
23:25:21	NJPC –Abdullapur-II closed.
23:27:08	NJPC # 3 synchronised.
23:32:43	400 kV Hissar-Patiala synchronised.
23:35:22	Supply extended to Railways and to Yamuna Nagar
23:38:14	400 kV Hissar-Fatehabad restored
23:42:50	Supply to Pong on 220 kV Pong-Jallandhar-I
23:46:	400 kv Abdullapur-Bawana-I restored.
23:54:26	Uri # 2 started in islanded mode with load at Ziankote
00:01:20	Salal # 4 started in islanded mode with Jammu load
00:09:46	400 kV Mandola-Bawana –II restored.
00:11:49	400 kV Bawana-Hissar charged from Bawana and closed at Hissar at 00:18:34
00:14:27	400/220 kV ICT at Bahadurgarh restored
00:20:57	400/220 kV ICT-1 at Kaithal restored (from 220 kV)
00:20:57	400 kV Hissar-Kaithal restored
00:23:27	400 kV Bahadurgarh-Bawana restored.
00:30:28	400 kV Hissar-Bhiwani restored.
00:43:39	400 kV Jallandhar-Chamera II charged
01:26:11	Chamera 2 unit synchronised.
01:27:55	Supply extended to Kishenpur on 400 kV Chamera2-Kishenpur
01:29	Salal island tripped so that it could restored.
01:46:12	Supply extended to Salal on 220 kV Kishenpur-Salal-1
01:53:49	Salal unit # 4 synchronised.
02:42:17	Uri island tripped so that it could restored.
03:13:11	Supply extended to Wagoora through 220 kV Kishenpur-Pampore-Wagoora line
03:21:38	400 kV Wagoora-Uri-II normalised.
03:29:17	Uri unit # 3 synchronised.

6.5 Supply interruption to Railways and its restoration:

The tripping in Punjab, Haryana system led to the supply interruptions to Railways in Delhi-Ambala, Ambala-Kalaka, Ambala-Saharanpur, Ambala-Amritsar and Sirhind-Una sections. Traction Supply details shown in Exhibit 6/I. Apart from above there were interruptions in Delhi-Howrah and Saharanpur-Moradabad sections in the morning hours as well but the same was not related with the 0301 hours grid disturbance.

The supply interruptions as given by Northern Railways authorities are given below with Remarks on restoration of power supply to the affected sub-stations.

Table 12: Interruption in Traction Supply as given by Railways

Railways section	Feeding Sub-220 or 132 Grid Sub-station	Sub-station under control Area	Traction sub-Sub-station	Supply interruption time (as given by Railways)		Remarks
				From	To	
Delhi-Howrah	220 kV Dadri (G)	Dadri (G), NTPC	Dhankore	0020	1320	220 kV Dadri-Dhankore D/C owned by Railways tripped. Supply to this section was extended from 220 kV Auraiya.
Delhi-Ambala	220 kV Narela	Delhi	Narela	0138 2145	0729 2245	Supply extended to Narela from Mandola at 0702 hrs
Delhi-Ambala	220 kV Panipat (Th)	Haryana	Diwana	0207 2155	1023 2255	Supply extended to Diwana on 132 Diwana-e feeder at 0713 hrs
Ambala-Kalka	220 kV Dera-bassi	Punjab	Ghaggar	0108	1017	Supply interruption due to tripping of lower voltage lines under foggy conditions prior to disturbance and supply to 400/220 kV Patiala was extended at 0607 hrs
Ambala-Amritsar	220 kV Rajpura	Punjab	Rajpura	0108	0638	
	220 kV Sahnewal	Punjab	Sahnewal	0103 2153	0912 0015	Supply to Punjab area was extended at

	220 kV Jamsher	Punjab	Chiheru	0300 2153	0950 0015	Patiala, Ludhiana, Jallandhar at 0617, 0637 and 0506 hrs respectively, however, due to massive tripping/ non holding of lines in foggy conditions in 220 kV network, delayed the supply extension.
	220 kV Butari	Punjab	Butari	0300 2153	1036 0015	
Sirhind-Una section	132 kV Kuri	Punjab	Kurali	0300	0800	
	132 kV Anandpur Sahib	Punjab	Anandpur Sahib	0253	1130	
Moradabad-Sahranpur section	220 kV Roorkee	Uttrakhand	Roorkee	0310	0358	Local temporary problem
Ambala-Sahranpur section	400/220 kV Abdullapur	ISTS, NR	Jagadhari	0300	0545	Supply was extended to Abdullapur substation by 0510 hrs.

x----x----x

SECTION 7

Issues of importance and suggested remedial measures

7.1 Replacement / cleaning of insulators:

In view of the large scale trippings in the Northern Regional Grid during winter months due to flashover / failure of insulator strings under foggy weather conditions, it was envisaged to replace the porcelain insulators with the polymer insulators and action plan was also chalked out. As a result, the insulator strings in case of a number of lines were replaced. However, the same could not be completed in equally large number of lines due to various reasons.

In the meeting of the Crisis Management Group of Northern Region held on 4th January, 2010 and in the earlier meeting held on 16.12.2009 the progress in the matter was deliberated in detail and certain formats were also circulated wherein the constituents were advised to submit the details in respect of the locations where the replacement has been carried out and /or the locations where the cleaning has been done in the absence of replacement. It was also enquired from the constituents to specifically indicate whether the faults occurred due to flashover / insulator failures during the above disturbance periods were pertaining to the locations where the replacement has already been carried out or otherwise.

In this regard the requisite information has been submitted by POWERGRID for their NR-I and NR-II regions and the same is attached at Annexe- 7/I. On perusal of the same it can be seen that the locations of fault have been only in those sections where the replacement has not been carried out while in case of locations where the insulators have been replaced with polymer insulators, no flashover / failure of the insulators has been observed. Similar details from other constituents are awaited.

Hence, on the basis of the information furnished by POWERGRID, it can be inferred that the replacement of the porcelain insulators with polymer insulators is an important requirement. Since this phenomenon is across all the utilities and still a large number of strings are to be replaced with polymer insulators, it is important that in order to ensure the reliability of the transmission system, immediate attention may be given to this and all such replacements may be carried out in a time bound manner. Further, as due to increase in pollution/density of fog, the fog affected areas are on an increasing trend, it is important that the requirement of replacement of insulators should be revisited by each of the constituent and

wherever the polymer insulators have not been planned, but trippings/flashover are increasing, the same also need to be replaced at the earliest.

It can also be seen from Section-3 of the report that the outages at 220 kV level have been unprecedentedly high on 2nd January 2010 and calls for a concerted action on the insulator replacement/cleaning front by all the utilities involved, particularly the state agencies also. From the details it is also seen that while in case of 400 KV network the tripped lines were continuously being revived back, in case of 220 KV lines such action is not visible. Hence all concerned agencies need to further examine that during such critical periods what is the practice of restoring of the tripped circuits and also investigate that in these specific cases what attempts were made to restore the tripped lines and in case of any delays what measures are being planned by them to achieve improvement in the future.

7.2 Protection coordination

In the above disturbances the gravity of the incidents was compounded at places due to unintended and unexpected operation of protection system while at some places the desired protection did not operate. Some of the examples are as under.

Disturbance at 03:01 hrs :

a) Tripping of 400 KV Khedar-Moga circuit on over current protection due to undesired oversetting (please refer para 3.3.3 of the report).

Disturbance at 21:54 hrs:

a) Non-clearance of fault on 400 KV Bamnauli-Ballabhgarh-2 for close to two (2) minutes due to non-availability of directional earth fault protection on 400 KV Mandaula-Bawana-Bamnauli-Ballabhgarh section (please refer para 4.3 of the report).
b) Undesired settings (Zone-5) on 400 KV Dadri-Panipat-2 distance protection at Dadri NTPC end (please refer para 4.2.6 of the report).
c) Instances of overreach observed on some 400 KV lines at Muradnagar as well as outage of series capacitors on lines for on fault in the adjacent line section (please refer para 3.2.2 of the report).

Necessary coordination and checking of the protection settings need to be ensured so that the system operator's efforts during handling contingencies is not adversely affected on account of such unintended protective relay operations.

Further directional earth fault relays, wherever not provided, must be provided in the 400 kV system to ensure adequate back up protection in cases where the primary protection fails to operate and the fault is beyond Zone-3 at the remote end

buses. This might be implemented immediately for the 400 kV Delhi ring main system.

The protection schemes on the 400 kV Ballabgarh-Bamnauli D/C line might be thoroughly checked along with circuit breaker timings to ensure that faults are cleared in time and unintended trippings do not take place.

7.3 Requirement to change the CT ratio to higher range

Line flow measurements were hampered in many cases due to 1000:1 Current Transformer (CT) ratio adopted in case of 400 KV lines. The telemetered value in such cases got freezed as soon as the power flow exceeded a certain range say 600 MW. (Please refer paras 3.3.4 and 4.2.4 and 4.2.7 of the report). Hence the CT ratio needs to be changed to higher value, say 2000:1 for all the 400 kV interconnecting lines where there is a possibility of having the flow increased beyond 600 MW. Further for the lines having Quad Moose or Bersimis sections with still higher flow the CT ratio would need to be changed to still higher value. In this regard the communication (Annexe-7/II) has been sent to all the constituents and it is important that necessary changes may be incorporated at the earliest.

7.4 Observability of grid sub-stations

At a number of grid sub-stations / generating stations particularly which have come out recently, Remote Terminal Units (RTUs) have not been commissioned. As a result of this the real time data from these stations is not transmitted to NRLDC. Due to this the Operators at the Load Dispatch Centre have no information about the status of network / power-flow from these stations and hence the real time operation is severely affected. The details of generating stations/grid sub-stations which are of regional importance and are operating without commissioning of the RTUs/data telemetry facility are enclosed at Annexe-7/III. It is important that for satisfactory real time operation of the grid, all such existing locations which are functioning without RTUs and data telemetry facilities as well as the generating stations / grid sub-stations which are to be commissioned in the near future, the provision of RTUs and data telemetery needs to be build immediately.

7.5 Adequate back-up power supply at wide band communication node / repeater stations:

The real time data is being transmitted to regional load dispatch centre from different SLDCs /Control Centres on wideband communication network which is having communication node / repeater stations on the route. It has been observed that whenever there are incidences of grid supply failure some of these nodes / repeater stations are not able to function properly due to failure of back up power

supply at these locations. In the above disturbances, due to failure of power supply, the Govindgarh Microwave station in Punjab was out from 06:49 hrs of 11:56 hrs on 02.01.2010, which resulted into loss of data from most of the sub LDCs of Punjab and a number of Centre sector RTUs in NR-II (Exhibit-7/I).

Similarly due to failure of power supply at Udhampur there was outage of complete J & K data. In this regard it is stated that there are 135 wideband nodes in NR (details given at Annexe-7/IV) out of which 61 nodes are under AMC (centralized), while in rest of the nodes the status of maintenance arrangement is not known. It is important that all the constituents should make adequate arrangement for back up power supply at all these nodes so that availability of back-up power supply in the event of grid disturbances is ensured and data during the critical period is not interrupted.

7.6 According high priority to safety net such as Under Frequency Relays (UFRs), Under Voltage Relays (UVRs) and System Protection Schemes(SPS)

In the above disturbances it has been observed that after separation of the sub system, consisting areas of Punjab, Haryana, Himachal Pradesh and J&K, the separated system could not be sustained mainly due to inadequate relief extended by way of operation of UFR and df/dt relays and hence the defense mechanism planned to give relief during such contingencies failed. All utilities need to accord high priority for making such defense mechanisms fool-proof and testing them periodically to ensure that they are always in operation.

The issue of UFRs and df/dt relays, although being discussed in every meeting at the NRPC level, the failure in both the disturbances clearly suggests that the state utilities are only paying lip service to this important item and there is little seriousness in having such schemes expeditiously commissioned. If not addressed adequately, this situation would only lead to more grid collapses.

7.7 Requirement to deploy trained manpower at control centres / sub-stations:

In the above disturbances it has been observed that at a number of locations the operators' actions were not commensurate with the requirement as a result of which the gravity of the contingency was compounded. Some of the examples are;

Disturbance at 03:01 hrs.

a) Absence of timely action by operators at PSEB SLDC /Ropar Power Station in backing down the generation at Ropar Thermal Plant even after tripping of a

number of lines emanating from the Ropar generating station. As a result of this, all the machines at Ropar had islanded and tripped on overspeed at 02:56:30 hrs. This aggravated the situation and led to the separation of system at 0301 hrs. (please refer para 3.3.2 of the report).

b) Similarly, Panipat TPS Stage-II was lost at 0155 hrs. (please refer para 3.2.3 of the report).

c) Low rate of restoration of the 220 kV system in Punjab/Haryana/BBMB system which were tripping during the night hours.

Disturbance at 21:54 hrs.

d) Ensuring precautions when a breaker has to be kept OFF such as toggling to 'non-auto' mode and keeping isolators on both sides of the breaker in OFF condition e.g. 400 KV Bamnauli substation. (please refer para 4.3 of the report).

e) Deploying personnel who have the capability quickly analyze any tripping before restoring any transmission elements so as to avoid any mishap. (please refer para 4.3 of the report).

With the interconnection of the large grids and increase in the network size, the complexity in the operation and control of the system is increasing and in order to operate the system under the present situation, presence of trained and skilled manpower in all the control centres / generating stations and sub-stations control rooms is extremely important. It is therefore important that availability of trained and skilled manpower at all such locations must be ensured.

7.8 Strengthening of the control centres / sub-stations during contingent situations:

During critical periods, particularly during peak winter season and/or on days when heavy fog is anticipated it is important that additional manpower is deployed in different control centres /sub-stations so that contingent situations may be handled efficiently.

7.9 Non-availability of Reports / data from different constituents:

Immediately after the disturbances the Flash Reports were issued by NRLDC about the incidents and as per the provisions of Grid Code all the constituents were required to send the complete details of the incidences as observed in their system along with DRs /ELs printouts as well as all other tripping details. It has however, been observed that from a large number of constituents, the transmission of such information to NRLDC was not timely in spite of repeated reminder / persuasion. For instance no DR or EL or Numerical relay output has been forwarded by UPPCL (for the trippings at Muradnagar substation), BBMB, HVPNL (for the trippings at

Panipat TPS) and RVPNL (for the trippings at Khetri). As a result of this the work of establishing the sequence of events and analysis of the incidences has been hampered / delayed. It is important that all the constituents must give such information to the concerned RLDC immediately after such incidences.

7.10 Analysis of the grid disturbances/incidents in their systems by individual utilities:

With the expansion of the power system, complexity has increased tremendously. While a decentralized mode is observed in scheduling and other market mechanism, reliability of the system can also be ensured in a decentralized fashion. It has been observed that either sketchy details have been furnished by many utilities or bulky raw data forwarded to NRLDC without any analysis at their end.

For instance DTL forwarded DR/EL outputs at Bawana/Bamnauli which were totally irrelevant and without any useful information and with no proper date and timings. despite such a serious event taking place in their system, the communication forwarded by DTL was without any analysis.

Likewise, while PSEB forwarded the outputs from their power stations after the incident, there was no list of 220 kV line trippings and these had to be obtained after a lot of persuasion. Further, there was no attempt by the Punjab SLDC at analyzing the data and submitting the same to NRLDC.

In case of HVPNL also only a list of line trippings were submitted along with the Numerical Relay output at Khedar end for 400 kV Khedar-Moga line. However there was no attempt by SLDC Haryana to analyse these trippings and inform NRLDC. Despite the preliminary report being placed on NRLDC's website on 6th January 2010, there has been no written confirmation also that the overcurrent relay setting on 400 kV Khedar-Moga line at Khedar end has been disabled.

Likewise, there has been no analysis from NTPC Dadri and a confirmation that the Zone-5 of the distance protection relay on 400 kV Dadri-Panipat -2 line has been disabled.

This lack of seriousness in analyzing any event is a violation of the IEGC provisions and affects reliability. It provides little comfort to the public at large that the utilities have been taking prudent measures to ensure reliability of the electricity grid.

7.11 Provision of time synchronization through GPS in all the generating stations / sub-stations of regional importance:

While carrying out the detailed study of the grid disturbances and analysis of the faults, it has been observed that in case of a number of constituent stations the timing of the disturbances were not tallying due to mis-match in the timings being set at their respective stations. In order to carry out the post analysis it is extremely important that all the recording equipment at generating stations / sub-stations, which are important from regional consideration, must be time-synchronized using GPS.

Apart from time synchronization, the triggering of DRs or EL or Numerical Relays for different analog and digital inputs must be tested periodically so as to facilitate proper analysis at the time of any major tripping. Clear labeling of DR/EL and Numerical Relay outputs which indicate the substation name, feeder, date and time correctly is also important so as to facilitate proper analysis of events in the system.

7.12 Provision of Auto-Reclosure feature on the transmission lines

In case of some of the generating stations / sub-stations the lines are not equipped with auto-reclosure feature. As a result of this the lines are going under outage even for transient faults. For the reliability of the system it is important that the single phase auto-reclosure feature for all the lines, including those emanating from generating stations are in service.

7.13 Sustained high voltages during network build-up and availability of synchronization facilities at important substations

At many places it was observed that during system build-up extraordinarily large time was taken in connecting the initial loads. As a result of this the voltages were in high range and extension of supply to neighboring nodes took much longer. It is important that the staff deployed at the control centres must be adequately trained and well informed to handle the untoward situations instantaneously and the loads which are to be energized during such conditions are identified in advance.

Likewise availability of synchronization facilities and trained manpower at important substations is a basic requirement for fast restoration of the system.

7.14 Maintaining a state of high alertness by all control centres during a crisis

Partial outage of sub-systems within the Northern Grid have been occurring in a fairly regular manner. Whenever the effect is fairly widespread, NRLDC informs all the SLDCs in the region about this abnormality and advises these utilities to remain in a state of high alert and keep their respective drawals from the grid in check. It

has been observed in the past and on this occasion also that the state control areas which have not been affected have not exercised the necessary diligence and continue to overdraw citing normal frequency conditions. On many occasions this makes the system insecure to even a single contingency.

For instance in both these incidents, Rajasthan system, although not affected, continued to overdraw and the Bhiwadi 400/220 kV ICTs were fully loaded making the system insecure to a single ICT tripping. There is a high possibility of secondary disturbances and widespread collapse of the NEW grid due to such actions. It is therefore important that under such situations all utilities must take utmost care to restrict their drawls as per grid requirements and extend all possible support.

7.15 Availability of primary response from generating units:

Primary response from generating units or Free Governor Mode of Operation (FGMO) is essential to arrest the sharp rise/fall in frequency. Implementation of the Honourable Commission's order dated 20th August 2009 in petition no. 66/2003 becomes very important in this regard. Else in a large grid such as ours, secondary collapses on account of high frequency and high voltage in case of such grid disturbances could occur.

7.16 Commissioning of additional 400 kV links to take care of fog related trippings:

The additional links in the affected corridor (central to western part of the grid) such as 400 kV Bhiwadi-Moga D/C and 400 kV Meerut-Kaithal D/C have been palnned and are being executed. These links would definitely provide for enhanced transfer capability in the corridor. However, considering the heavy flow from Rajasthan towards Haryana/Punjab from 220 kV Khetri substation mentioned in section 4.1 of the report, an additional corridor from North Rajasthan to Punjab/Haryana such as say from Suratgarh to Moga may become very useful. Similarly Loop-In and Loop-Out (LILO) of the 400 kV Dehar-Bhiwani and Dehar-Panipat lines at say Patiala and Panchkula 400 kV substations respectively would also strengthen the system and provide additional flexibility during the winter period.

7.17 Reactive Power Management:

Steady state low and high voltages have been occurring on seasonal basis in the Northern region. During the period June to September, inadequate level of shunt capacitors has already led to a decrease in the transfer capability. The need for installing adequate shunt capacitors as recommended by the NRPC has already been

emphasized in several fora. In this incident, antecedent voltages were satisfactory and were therefore not a direct contributor to the grid disturbances. Nevertheless, there should be no slippage in the shunt capacitor installation programme by all utilities in the Northern region.

Steady state high voltage in the transmission system associated with large remote hydro power stations in Himachal Pradesh, Uttarakhand and J & K is also a serious issue when the plants are closed during the winter night off-peak hours. In the last NRPC meeting held in Chandigarh on 24th Dec 2010, the constituents of Northern region have approved installation of bus reactors at fifteen (15) locations by POWERGRID. Installation and commissioning of these facilities needs to be expedited in the interest of system security.

These two grid disturbances have also brought out the need for adequate dynamic reactive power reserves. In both the instances, there was a sudden requirement of 1500-3000 MVAr in the grid on account of heavy line loading post-contingency and/or sustained fault. These could only be met partially from the generating stations which led to a sharp drop in voltages and picking up of some distance relays. Dynamic reactive power reserves in the form of Static VAR Compensators (SVCs), Synchronous condenser capability in existing and new Hydro stations therefore needs to be examined closely in the interest of system security.

x----x----x